Reinforced Joint Clamp

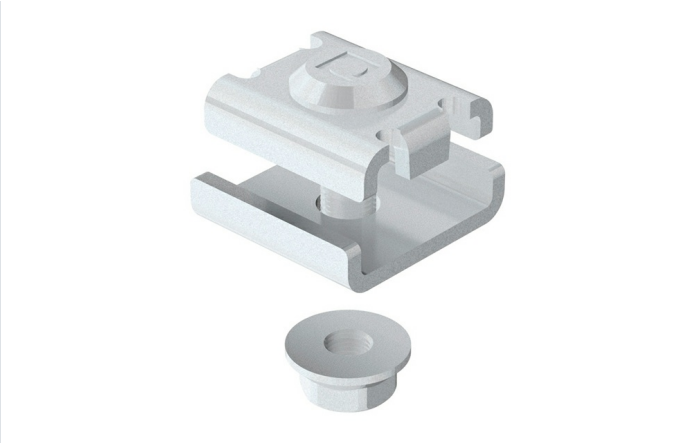

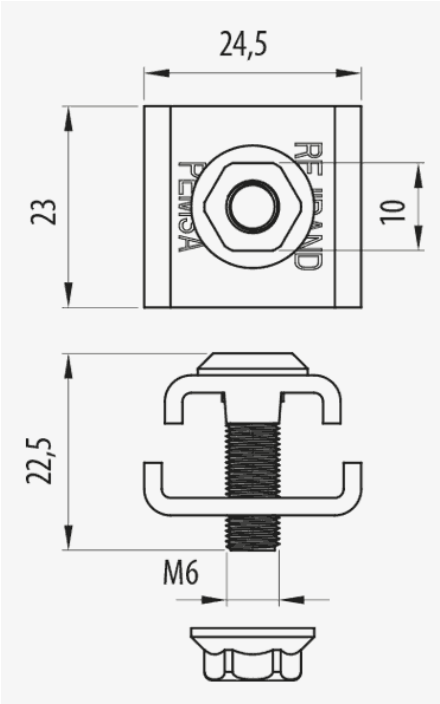

Description

Steel component for joining sections of Rejiband trays consisting of a captive screw, connecting plate and a nut. Thanks to its construction, it greatly simplifies the joint between sections and ensures the greater mechanical strength of the joint between trays, optimizing the possible maximum load values. It is available in various Protection Systems.

Advantages

Simplification of the joint assembly between different sections.

Greater mechanical strength of the section joints.

N Mark of Aenor, UL Certificate, Certificate IECC CB according to IEC 61537.

E90 fire resistance (90 minutes, 1000°C) according to DIN 4102-12.

Available in different protection systems: EZ and GC stainless steel AISI 316.

Applications

Suitable for the joining of sections of Rejiband trays for electrical and/or telecommunications installations in: Civil Works, Tunnels, Car Parks, Public Buildings, Shopping Centres, Major Infrastructures, Airports, Underground and Railway, Tertiary sector and industrial applications: Naval, Petrochemical, Textile, Chemical and Food.

Solutions

INDUSTRIA ALIMENTARIA

Any information included in this document is property of Pemsa®. It cannot be copied, total or partially, nor disclosed to third parties nor used without the explicit and written authorization by Pemsa®. These documents total or partially, can be subject to patent and/or be patent pending and therefore protected by intellectual and industrial property rights. Pemsa, Rejiband, Pemsaband, Inducanal, Rejitech, Megaband, Pemsaflex are registered trademarks property of "Pemsa Cable Management, S.A."

Reinforced Joint Clamp

Main technical characteristics

16	50	-50 / 150 °C	ETIM EC002413

Product data

Ⓢ	Class IEC 61537	REF	kg/u	Ⓜ	
EZ	Class 3	64010061	0.029	Steel with surface coating	E90 (90 min. 1000°C)
BC	Class 5	64020061	0.029	Steel with surface coating	E90 (90 min. 1000°C)
GC	Class 8	64030061	0.030	Steel with surface coating	E90 (90 min. 1000°C)
INOX	Class 9D	64060061	0.029	Acero inoxidable AISI 316L	E90 (90 min. 1000°C)
BK8	Class 8	64080061	0.030	Steel with surface coating	E90 (90 min. 1000°C)
CU	Class 1	68000038	0.029	Steel with surface coating	A1 No combustible

Ⓢ Protection System

CU - Copper electroplated

PG - Pregalvanised

EZ - Electrogalvanised

BC - Electrogalvanised Bichromate

BK8 - High Resistance Coating

GC - Hot Dip Galvanising

INOX - Stainless Steel

PT - Polyester Paint

AL - Aluminum

LN - Brass or Nickel-plated brass

Ⓜ Insulating materials

PC+ABS - Halogen Free Polycarbonate + ABS

PVC - Polyvinyl Chloride

PP - Halogen Free Polypropylene

PA6 - Halogen Free Polyamide 6

PA12 - Halogen Free Polyamide 12

PU - Polyurethane

PE - Polyethylene

NBR - NBR rubber

PET - Thermoplastic Polyester

TPV - Thermoplastic

Any information included in this document is property of Pemsa®. It cannot be copied, total or partially, nor disclosed to third parties nor used without the explicit and written authorization by Pemsa®. These documents total or partially, can be subject to patent and/or be patent pending and therefore protected by intellectual and industrial property rights. Pemsa, Rejiband, Pemsaband, Inducanal, Rejitech, Megaband, Pemsaflex are registered trademarks property of "Pemsa Cable Management, S.A."

Reinforced Joint Clamp

Product applications

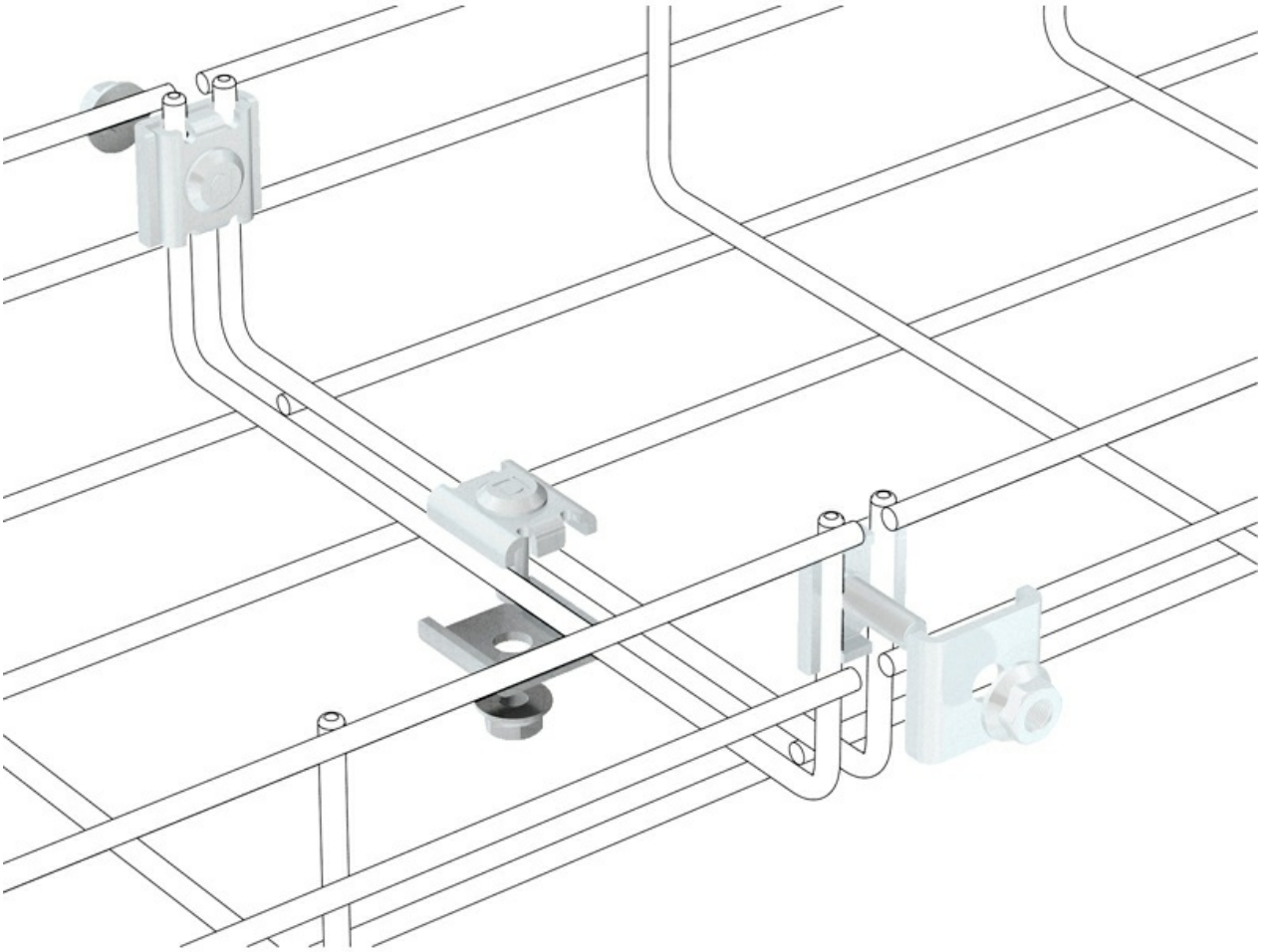

Any information included in this document is property of Pemsa®. It cannot be copied, total or partially, nor disclosed to third parties nor used without the explicit and written authorization by Pemsa®. These documents total or partially, can be subject to patent and/or be patent pending and therefore protected by intellectual and industrial property rights. Pemsa, Rejiband, Pemsaband, Inducanal, Rejitech, Megaband, Pemsaflex are registered trademarks property of "Pemsa Cable Management, S.A."