Assembly Accessories

Click Divider

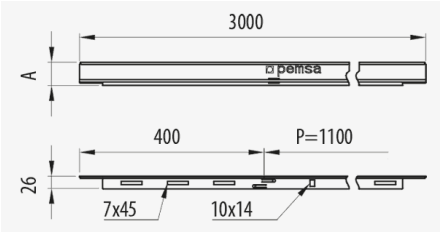

Description

Metal divider with click system for separating different types of wiring in Rejiband® and Pemsaband® trays and Megaband® ladder, available in various heights anc Protection Systems. It allows the screening between data and power cables within the same installation.

Advantages

Significant savings in installation time when used in wire mesh trays, thanks to a faster assembly with the Click system.

Encourages shielding between data and power cables within the same installation.

Suitable for all Pemsa cable tray ranges.

Wide adaptability and adjustment thanks to the three heights: 25 mm, 50 mm and 80 mm.

Available in various protection systems: PG, GC, BK8, AZ+ and stainless steel AISI 304 and AISI 316L.

Applications

Suitable to create adequate cable separation to improve and correct electromagnetic compatibility in installations of Rejiband®, Pemsaband® tray and Megaband® ladder in indoor installations in a dry atmosphere without contaminants, outdoor, industrial, marine, rural or aggressive indoor installations, environments involving sea water and industrial applications.

Solutions

INDUSTRIA ALIMENTARIA

Any information included in this document is property of Pemsa®. It cannot be copied, total or partially, nor disclosed to third parties nor used without the explicit and written authorization by Pemsa®. These documents total or partially, can be subject to patent and/or be patent pending and therefore protected by intellectual and industrial property rights. Pemsa, Rejiband, Pemsaband, Inducanal, Rejitech, Megaband, Pemsaflex are registered trademarks property of "Pemsa Cable Management, S.A."

Click Divider

Main technical characteristics

35, 60, 85	3	-50 / 150 °C	A1 No combustible	ETIM EC001000

Product data

Ⓢ	Class IEC 61537		REF	kg/u		Ⓜ
PG	Class 3	35	67020610	0.207	60	Steel with surface coating
PG	Class 3	60	67020611	0.309	48	Steel with surface coating
PG	Class 3	85	67020612	0.439	36	Steel with surface coating
GC	Class 5	35	67030610	0.258	60	Steel with surface coating
GC	Class 5	60	67030611	0.381	48	Steel with surface coating
GC	Class 5	85	67030612	0.539	36	Steel with surface coating
INOX	Class 9C	35	67050610	0.205	60	Stainless steel AISI 304
INOX	Class 9C	60	67050611	0.303	48	Stainless steel AISI 304
INOX	Class 9C	85	67050612	0.429	36	Stainless steel AISI 304
INOX	Class 9D	35	67060610	0.205	60	Acero inoxidable AISI 316L
INOX	Class 9D	60	67060611	0.303	48	Acero inoxidable AISI 316L
INOX	Class 9D	85	67060612	0.429	36	Acero inoxidable AISI 316L
AZ+	Class 8	60	81000312	0.386	48	Steel with surface coating

Ⓢ Protection System

CU - Copper electroplated

PG - Pregalvanised

EZ - Electrogalvanised

BC - Electrogalvanised Bichromate

BK8 - High Resistance Coating

GC - Hot Dip Galvanising

INOX - Stainless Steel

PT - Polyester Paint

AL - Aluminum

LN - Brass or Nickel-plated brass

Ⓜ Insulating materials

PC+ABS - Halogen Free Polycarbonate + ABS

PVC - Polyvinyl Chloride

PP - Halogen Free Polypropylene

PA6 - Halogen Free Polyamide 6

PA12 - Halogen Free Polyamide 12

PU - Polyurethane

PE - Polyethylene

NBR - NBR rubber

PET - Thermoplastic Polyester

Any information included in this document is property of Pemsa®. It cannot be copied, total or partially, nor disclosed to third parties nor used without the explicit and written authorization by Pemsa®. These documents total or partially, can be subject to patent and/or be patent pending and therefore protected by intellectual and industrial property rights. Pemsa, Rejiband, Pemsaband, Inducanal, Rejitech, Megaband, Pemsaflex are registered trademarks property of "Pemsa Cable Management, S.A."

TPV - Thermoplastic

Any information included in this document is property of Pemsa®. It cannot be copied, total or partially, nor disclosed to third parties nor used without the explicit and written authorization by Pemsa®. These documents total or partially, can be subject to patent and/or be patent pending and therefore protected by intellectual and industrial property rights. Pemsa, Rejiband, Pemsaband, Inducanal, Rejitech, Megaband, Pemsaflex are registered trademarks property of "Pemsa Cable Management, S.A."

Product applications

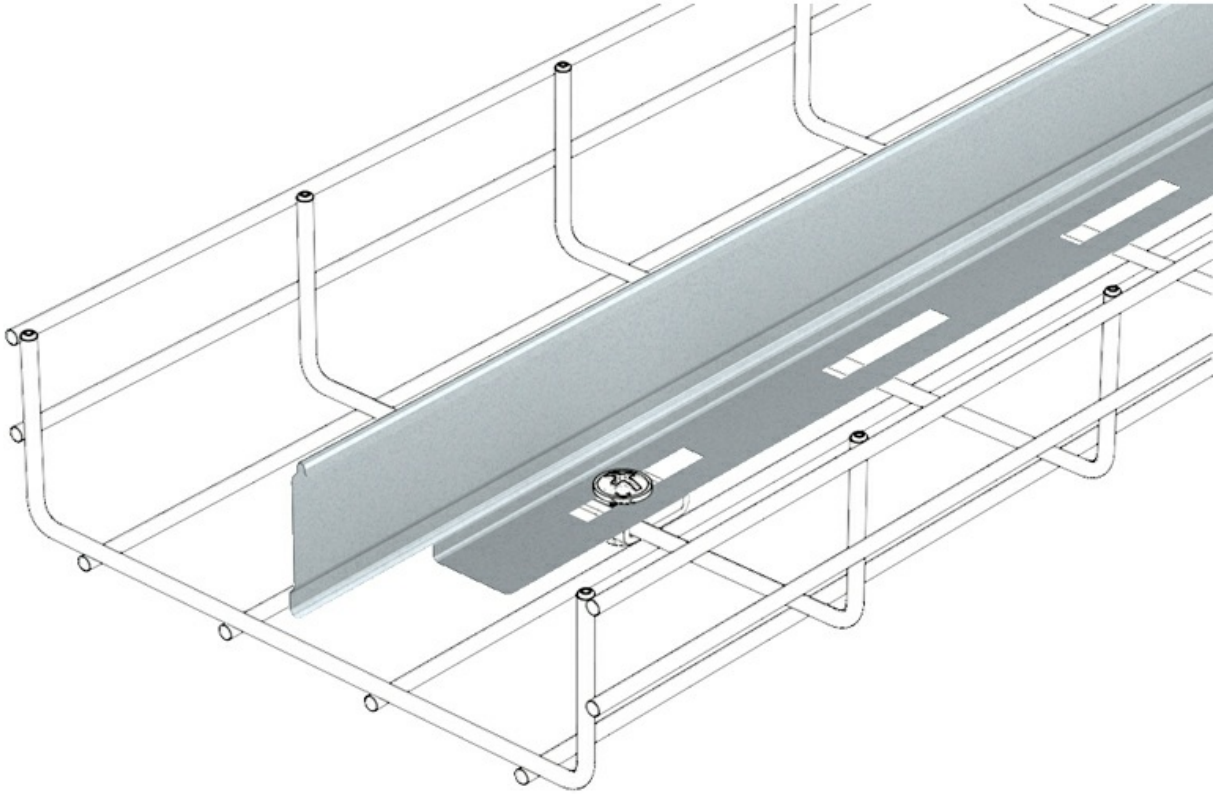

Any information included in this document is property of Pemsa®. It cannot be copied, total or partially, nor disclosed to third parties nor used without the explicit and written authorization by Pemsa®. These documents total or partially, can be subject to patent and/or be patent pending and therefore protected by intellectual and industrial property rights. Pemsa, Rejiband, Pemsaband, Inducanal, Rejitech, Megaband, Pemsaflex are registered trademarks property of "Pemsa Cable Management, S.A."

Click Divider

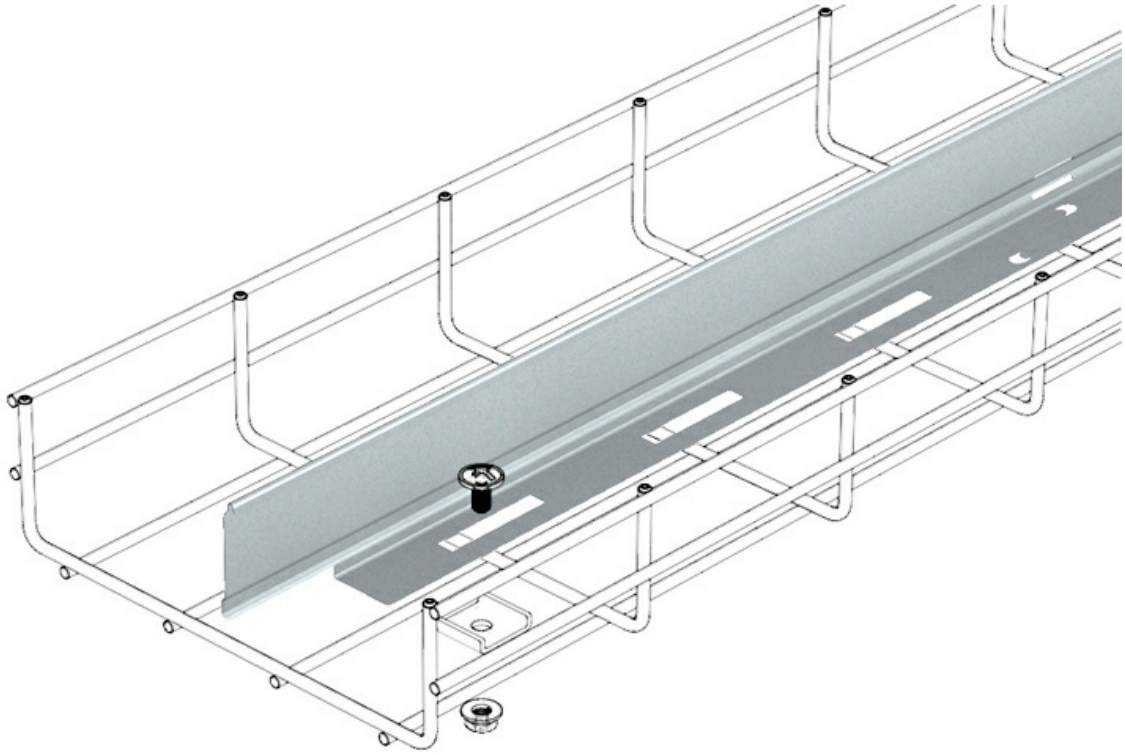

Any information included in this document is property of Pemsa®. It cannot be copied, total or partially, nor disclosed to third parties nor used without the explicit and written authorization by Pemsa®. These documents total or partially, can be subject to patent and/or be patent pending and therefore protected by intellectual and industrial property rights. Pemsa, Rejiband, Pemsaband, Inducanal, Rejitech, Megaband, Pemsaflex are registered trademarks property of "Pemsa Cable Management, S.A."

Click Divider

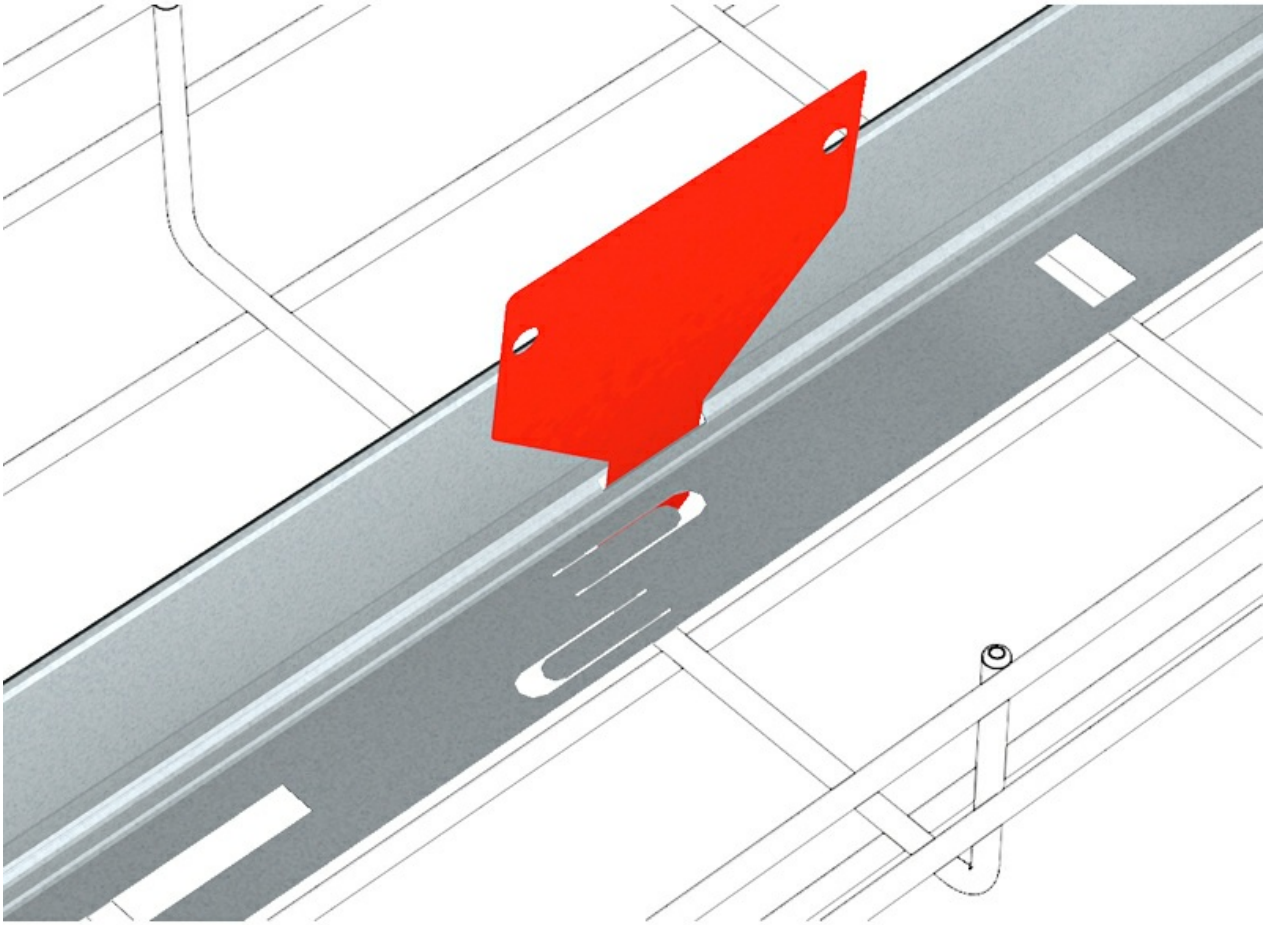

Any information included in this document is property of Pemsa®. It cannot be copied, total or partially, nor disclosed to third parties nor used without the explicit and written authorization by Pemsa®. These documents total or partially, can be subject to patent and/or be patent pending and therefore protected by intellectual and industrial property rights. Pemsa, Rejiband, Pemsaband, Inducanal, Rejitech, Megaband, Pemsaflex are registered trademarks property of "Pemsa Cable Management, S.A."

Click Divider

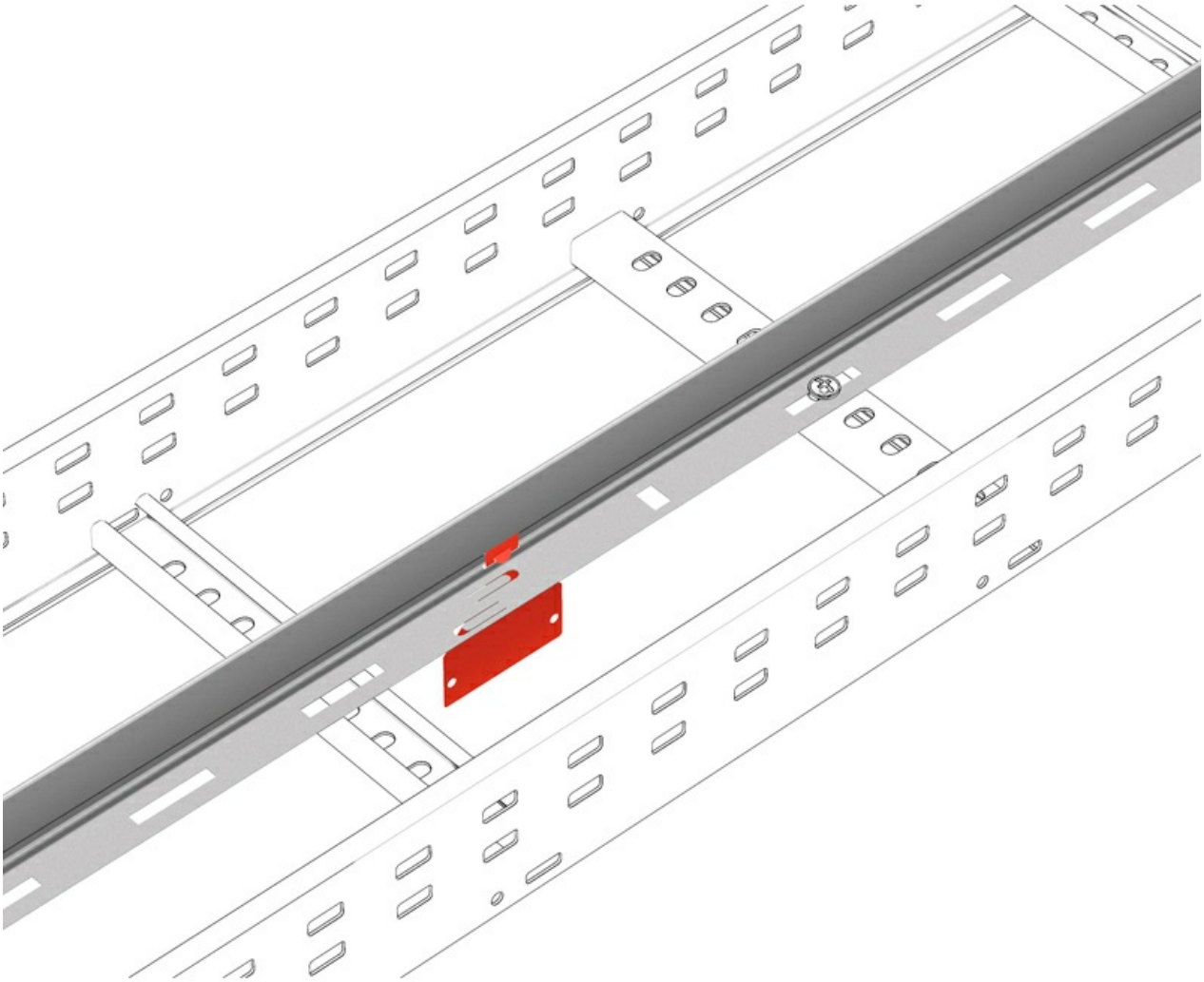

Any information included in this document is property of Pemsa®. It cannot be copied, total or partially, nor disclosed to third parties nor used without the explicit and written authorization by Pemsa®. These documents total or partially, can be subject to patent and/or be patent pending and therefore protected by intellectual and industrial property rights. Pemsa, Rejiband, Pemsaband, Inducanal, Rejitech, Megaband, Pemsaflex are registered trademarks property of "Pemsa Cable Management, S.A."

Click Divider

Any information included in this document is property of Pemsa®. It cannot be copied, total or partially, nor disclosed to third parties nor used without the explicit and written authorization by Pemsa®. These documents total or partially, can be subject to patent and/or be patent pending and therefore protected by intellectual and industrial property rights. Pemsa, Rejiband, Pemsaband, Inducanal, Rejitech, Megaband, Pemsaflex are registered trademarks property of "Pemsa Cable Management, S.A."