Stand off Bracket

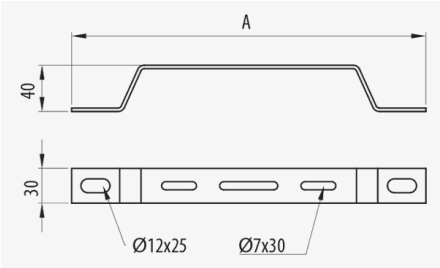

Description

Metal support that allows vertical or horizontal wall and floor mounting of Rejiband® and Pemsaband® trays. Attaches to the tray by using the Rejiband® Fastening. Made of steel and available in various sizes and Protection Systems.

Advantages

Can be used in both wall and floor installations.

Allows the installation of the tray at a distance of 40 mm from the wall or floor.

Due to its U-shape, it allows for uneven surfaces of the wall or floor.

Applications

It is suitable for the installation of Rejiband® and Pemsaband® trays and can be mounted vertically on a wall and is an efficient and simple solution as well in false floor installations.

Solutions

INDUSTRIA ALIMENTARIA FOTOVOLTAICA

Any information included in this document is property of Pemsa®. It cannot be copied, total or partially, nor disclosed to third parties nor used without the explicit and written authorization by Pemsa®. These documents total or partially, can be subject to patent and/or be patent pending and therefore protected by intellectual and industrial property rights. Pemsa, Rejiband, Pemsaband, Inducanal, Rejitech, Megaband, Pemsaflex are registered trademarks property of "Pemsa Cable Management, S.A."

Stand off Bracket

Main technical characteristics

180, 350	10	100	-50 / 150 °C	A1 No combustible	ETIM EC000022

Product data

Ⓢ	Class IEC 61537		REF	kg/u	Ⓜ
PG	Class 3	180	67030539	0.217	Steel with surface coating
PG	Class 3	350	67030540	0.337	Steel with surface coating
GC	Class 6	180	67030541	0.224	Steel with surface coating
GC	Class 6	350	67030542	0.348	Steel with surface coating
INOX	Class 9D	180	67060541	0.145	Acero inoxidable AISI 316L
INOX	Class 9D	350	67060542	0.225	Acero inoxidable AISI 316L

Ⓢ Protection System

CU - Copper electroplated

PG - Pregalvanised

EZ - Electrogalvanised

BC - Electrogalvanised Bichromate

BK8 - High Resistance Coating

GC - Hot Dip Galvanising

INOX - Stainless Steel

PT - Polyester Paint

AL - Aluminum

LN - Brass or Nickel-plated brass

Ⓜ Insulating materials

PC+ABS - Halogen Free Polycarbonate + ABS

PVC - Polyvinyl Chloride

PP - Halogen Free Polypropylene

PA6 - Halogen Free Polyamide 6

PA12 - Halogen Free Polyamide 12

PU - Polyurethane

PE - Polyethylene

NBR - NBR rubber

PET - Thermoplastic Polyester

TPV - Thermoplastic

Any information included in this document is property of Pemsa®. It cannot be copied, total or partially, nor disclosed to third parties nor used without the explicit and written authorization by Pemsa®. These documents total or partially, can be subject to patent and/or be patent pending and therefore protected by intellectual and industrial property rights. Pemsa, Rejiband, Pemsaband, Inducanal, Rejitech, Megaband, Pemsaflex are registered trademarks property of "Pemsa Cable Management, S.A."

Stand off Bracket

Product applications

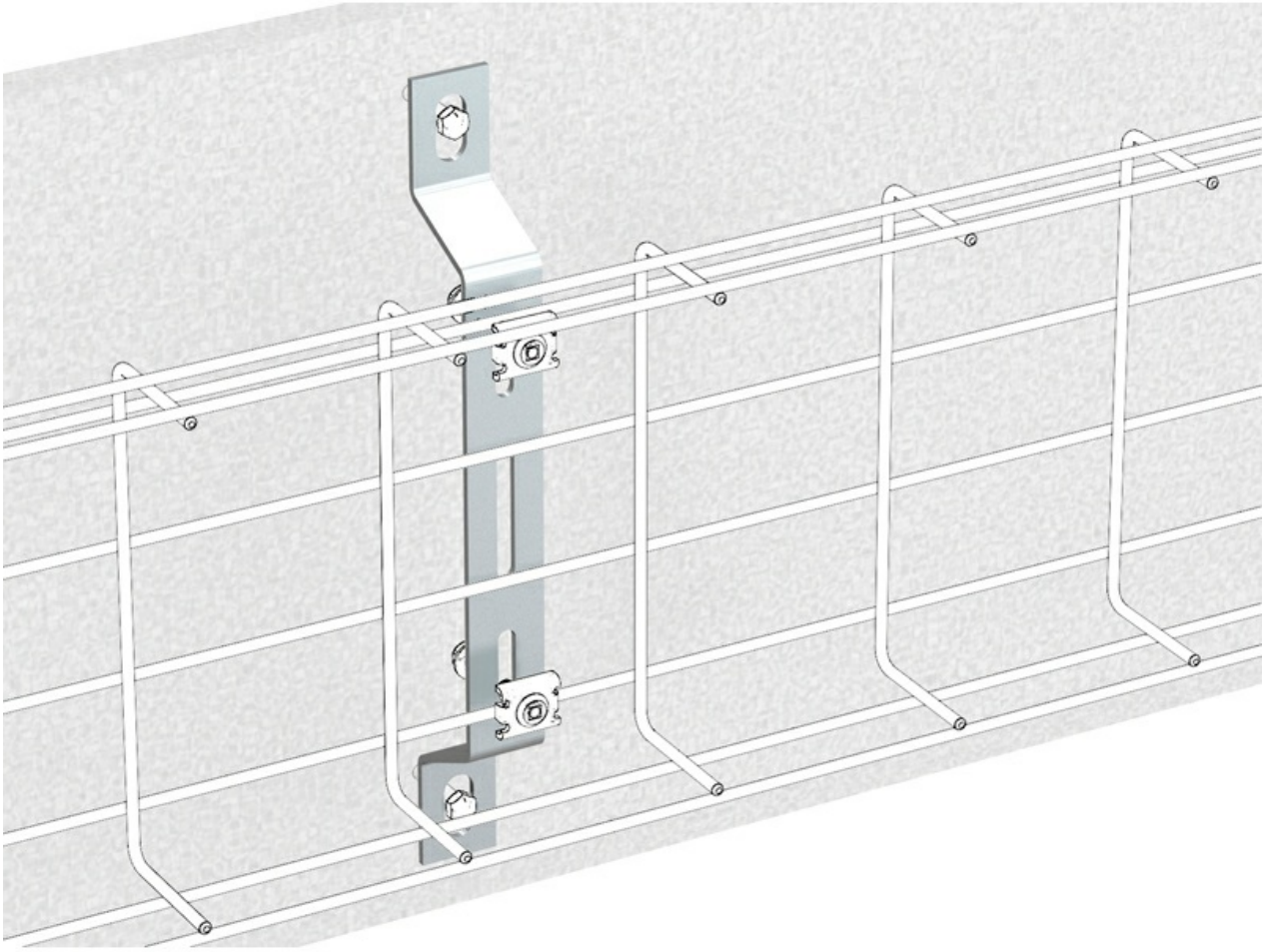

Any information included in this document is property of Pemsa®. It cannot be copied, total or partially, nor disclosed to third parties nor used without the explicit and written authorization by Pemsa®. These documents total or partially, can be subject to patent and/or be patent pending and therefore protected by intellectual and industrial property rights. Pemsa, Rejiband, Pemsaband, Inducanal, Rejitech, Megaband, Pemsaflex are registered trademarks property of "Pemsa Cable Management, S.A."

Stand off Bracket

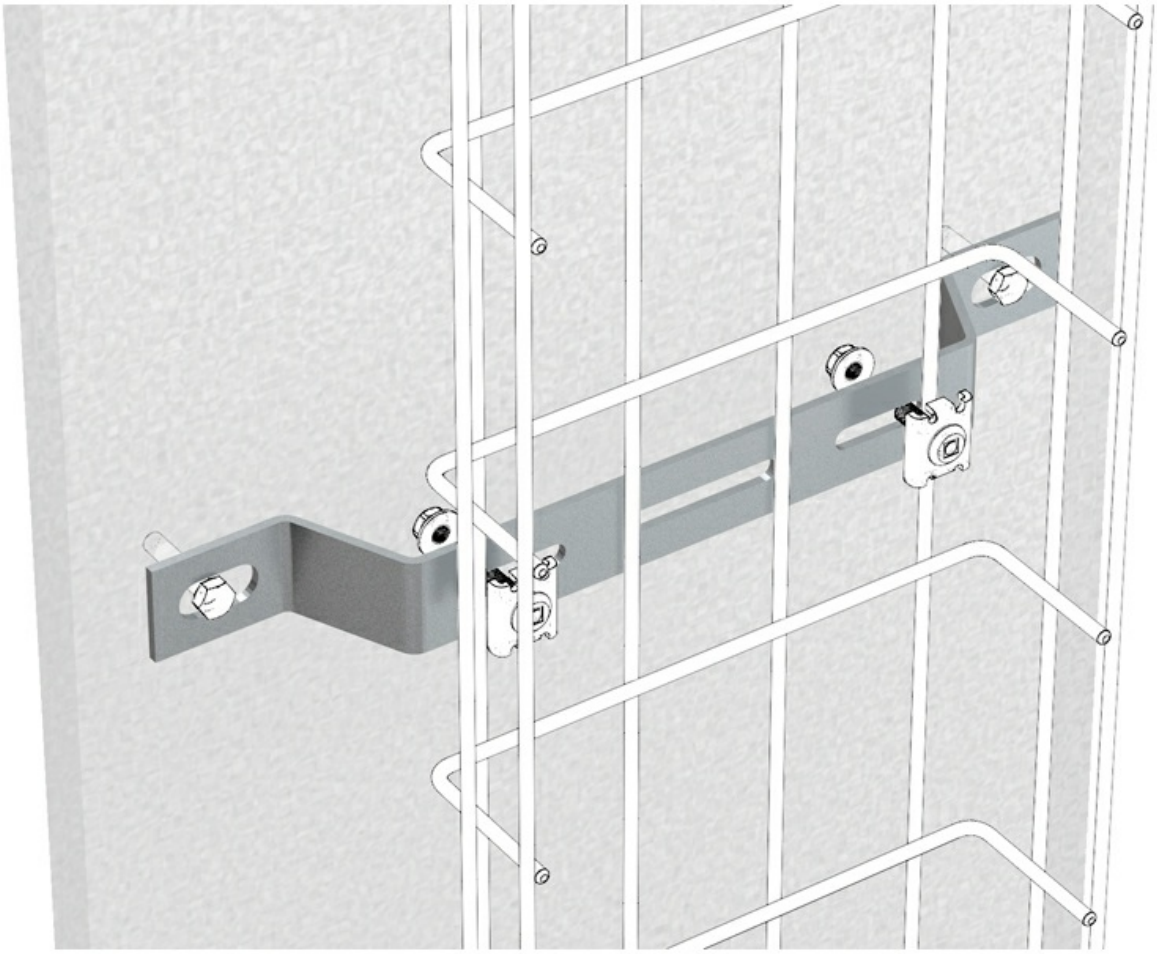

Any information included in this document is property of Pemsa®. It cannot be copied, total or partially, nor disclosed to third parties nor used without the explicit and written authorization by Pemsa®. These documents total or partially, can be subject to patent and/or be patent pending and therefore protected by intellectual and industrial property rights. Pemsa, Rejiband, Pemsaband, Inducanal, Rejitech, Megaband, Pemsaflex are registered trademarks property of "Pemsa Cable Management, S.A."

Stand off Bracket

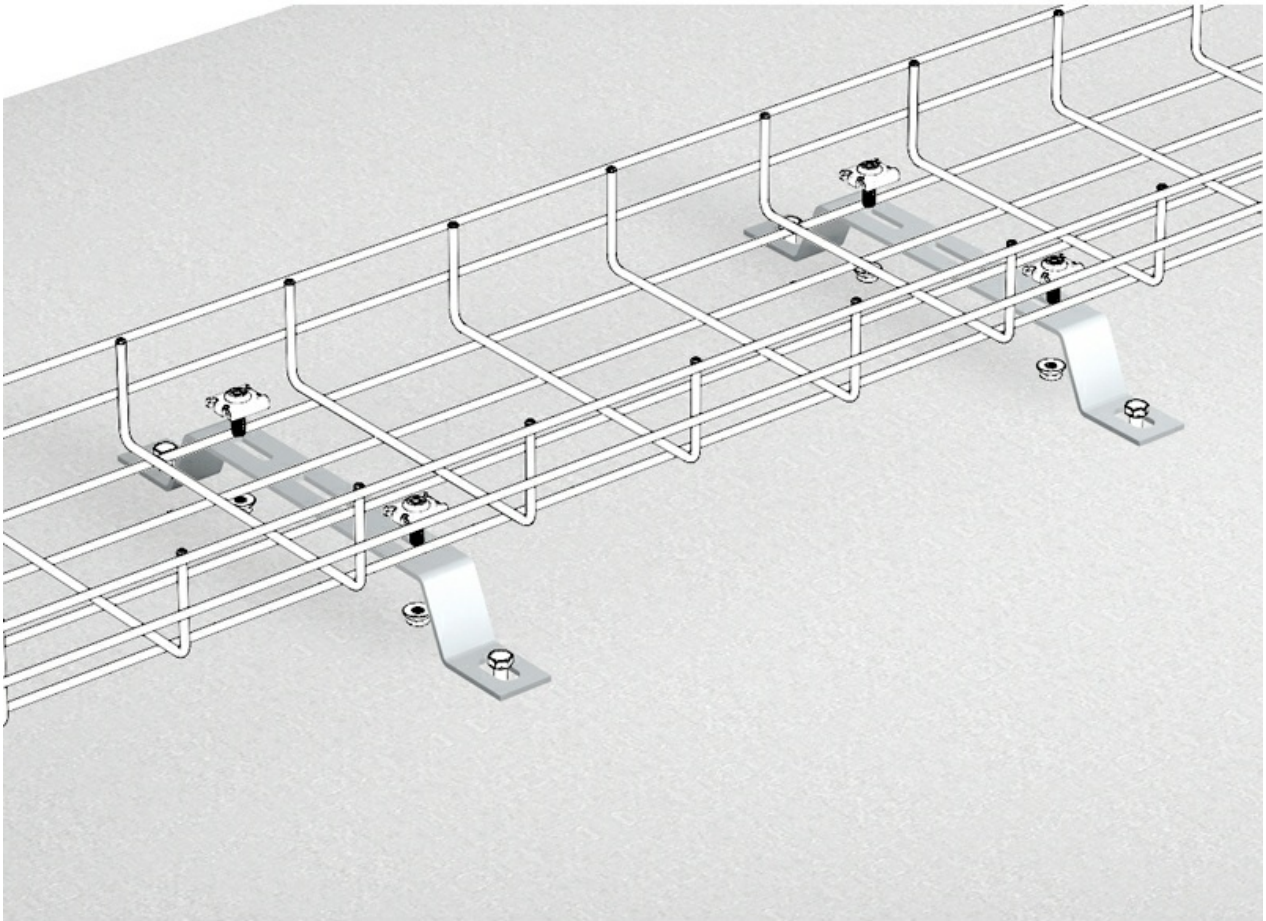

Any information included in this document is property of Pemsa®. It cannot be copied, total or partially, nor disclosed to third parties nor used without the explicit and written authorization by Pemsa®. These documents total or partially, can be subject to patent and/or be patent pending and therefore protected by intellectual and industrial property rights. Pemsa, Rejiband, Pemsaband, Inducanal, Rejitech, Megaband, Pemsaflex are registered trademarks property of "Pemsa Cable Management, S.A."