Rejiband 35

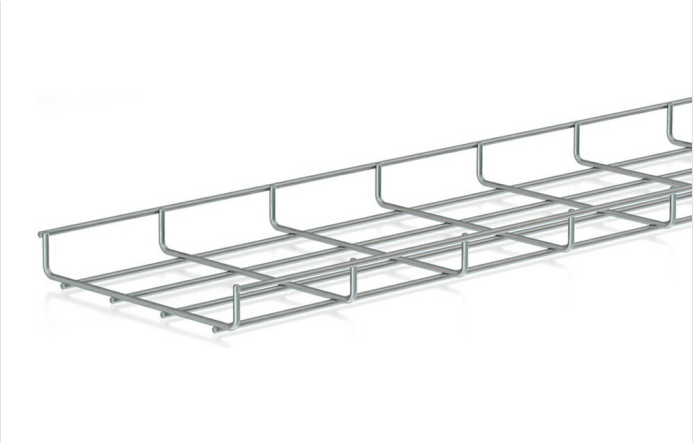

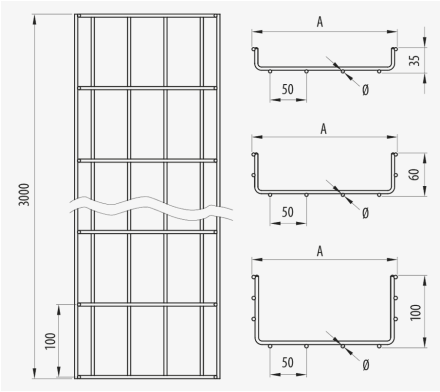

Description

35 mm high steel wire mesh tray with surface protection, or stainless steel AISI 304 or 316L, with safety edge for support and management of cables. The Rejiband cable tray is made up of a mesh of electrowelded rods that provide high strength and elasticity. The ease of installation, thanks to its flexibility and its Click quick connect system requiring no screws for supports and accessories, saves on material and labour costs. Manufactured according to international standard IEC 61537. Its wide variety of sizes and Protection Systems facilitates the most appropriate choice according to the needs of each installation.

Advantages

High resistance, flexibility and adaptable to each project providing a saving of more than 30% in the installation.

Rounded safety edge that prevents damage to the cables and harm to the installer.

N Mark of Aenor, UL Certificate, Certificate IECC CB according to IEC 61537.

E90 fire resistance (90 minutes, 1000°C) according to DIN 4102-12.

Flange height 35 mm and available in widths of 60, 100, 150, 200, 300 and 400 mm with a wide range of accessories.

Applications

Support, management and distribution of cables in Electrical and/or telecommunications installations in: Civil Works, Tunnels, Car Parks, Public Buildings, Shopping Centres, Data Processing Centres, Infrastructures, Airports, Underground and Railway. Tertiary sector and industrial applications: Naval, Petrochemical, Textile, Chemical and Food. Indoor applications in the dry or in exterior atmospheres with wet environments according to the various finishes.

Solutions

INDUSTRIA ALIMENTARIA

INDUSTRIA QUIMICA FARMACEUTICA

INDUSTRIA PETROQUÍMICA

ENERGÍA

FOTOVOLTAICA

CENTROS DE DATOS

EDIFICACIÓN. TERCIARIO

TUNELES. INFRAESTRUCTURAS

RESISTENCIA AL FUEGO

Any information included in this document is property of Pemsa®. It cannot be copied, total or partially, nor disclosed to third parties nor used without the explicit and written authorization by Pemsa®. These documents total or partially, can be subject to patent and/or be patent pending and therefore protected by intellectual and industrial property rights. Pemsa, Rejiband, Pemsaband, Inducanal, Rejitech, Megaband, Pemsaflex are registered trademarks property of "Pemsa Cable Management, S.A."

Rejiband 35

Main technical characteristics

35	60, 100, 150, 200, 300, 400	3	20 J	-50 / 150 °C	A1 No combustible	ETIM EC000853

Product data

S	Class IEC 61537		REF	kg/u		M	mm²
EZ	Class 3	60	60211060	0.409	24	Steel with surface coating	1208
EZ	Class 3	100	60211100	0.550	24	Steel with surface coating	2312
EZ	Class 3	150	60211150	0.604	24	Steel with surface coating	3616
EZ	Class 3	200	60211200	0.852	18	Steel with surface coating	4976
EZ	Class 3	300	60211300	1.160	18	Steel with surface coating	7696
EZ	Class 3	400	60211400	1.467	12	Steel with surface coating	10416
BC	Class 5	60	60221060	0.409	24	Steel with surface coating	1208
BC	Class 5	100	60221100	0.550	24	Steel with surface coating	2312
BC	Class 5	150	60221150	0.604	24	Steel with surface coating	3616
BC	Class 5	200	60221200	0.855	18	Steel with surface coating	4976
BC	Class 5	300	60221300	1.162	18	Steel with surface coating	7696
BC	Class 5	400	60221400	1.472	12	Steel with surface coating	10416
GC	Class 7	60	60231060	0.427	24	Steel with surface coating	1208
GC	Class 7	100	60231100	0.575	24	Steel with surface coating	2312
GC	Class 7	150	60231150	0.631	24	Steel with surface coating	3616
GC	Class 7	200	60231200	0.891	18	Steel with surface coating	4976
GC	Class 7	300	60231300	1.211	18	Steel with surface coating	7696
GC	Class 7	400	60231400	1.531	12	Steel with surface coating	10416
INOX	Class 9C	60	60251060	0.405	24	Stainless steel AISI 304	1208
INOX	Class 9C	100	60251100	0.545	24	Stainless steel AISI 304	2312
INOX	Class 9C	150	60251150	0.719	24	Stainless steel AISI 304	3504
INOX	Class 9C	200	60251200	1.018	18	Stainless steel AISI 304	4834
INOX	Class 9C	300	60251300	1.380	18	Stainless steel AISI 304	7494
INOX	Class 9C	400	60251400	1.747	12	Stainless steel AISI 304	10154
INOX	Class 9D	60	60261060	0.405	24	Acero inoxidable AISI 316L	1208
INOX	Class 9D	100	60261100	0.545	24	Acero inoxidable AISI 316L	2312
INOX	Class 9D	150	60261150	0.719	24	Acero inoxidable AISI 316L	3504
INOX	Class 9D	200	60261200	1.018	18	Acero inoxidable AISI 316L	4834
INOX	Class 9D	300	60261300	1.380	18	Acero inoxidable AISI 316L	7494
INOX	Class 9D	400	60261400	1.747	12	Acero inoxidable AISI 316L	10154
BK8	Class 8	60	60281060	0.412	24	Steel with surface coating	1208
BK8	Class 8	100	60281100	0.554	24	Steel with surface coating	2312
BK8	Class 8	150	60281150	0.608	24	Steel with surface coating	3616
BK8	Class 8	200	60281200	0.858	18	Steel with surface coating	4976
BK8	Class 8	300	60281300	1.160	18	Steel with surface coating	7696
BK8	Class 8	400	60281400	1.477	12	Steel with surface coating	10416

Any information included in this document is property of Pemsa®. It cannot be copied, total or partially, nor disclosed to third parties nor used without the explicit and written authorization by Pemsa®. These documents total or partially, can be subject to patent and/or be patent pending and therefore protected by intellectual and industrial property rights. Pemsa, Rejiband, Pemsaband, Inducanal, Rejitech, Megaband, Pemsaflex are registered trademarks property of "Pemsa Cable Management, S.A."

Ⓢ Protection System

CU - Copper electroplated

PG - Pregalvanised

EZ - Electrogalvanised

BC - Electrogalvanised Bichromate

BK8 - High Resistance Coating

GC - Hot Dip Galvanising

INOX - Stainless Steel

PT - Polyester Paint

AL - Aluminum

LN - Brass or Nickel-plated brass

Ⓜ Insulating materials

PC+ABS - Halogen Free Polycarbonate + ABS

PVC - Polyvinyl Chloride

PP - Halogen Free Polypropylene

PA6 - Halogen Free Polyamide 6

PA12 - Halogen Free Polyamide 12

PU - Polyurethane

PE - Polyethylene

NBR - NBR rubber

PET - Thermoplastic Polyester

TPV - Thermoplastic

Any information included in this document is property of Pemsa®. It cannot be copied, total or partially, nor disclosed to third parties nor used without the explicit and written authorization by Pemsa®. These documents total or partially, can be subject to patent and/or be patent pending and therefore protected by intellectual and industrial property rights. Pemsa, Rejiband, Pemsaband, Inducanal, Rejitech, Megaband, Pemsaflex are registered trademarks property of "Pemsa Cable Management, S.A."

Rejiband 35

Load diagrams

EZ BC GC BK8 — 35

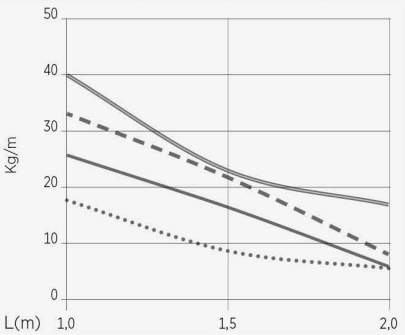

EZ BC GC BK8		mm²
35	60	1.215
	100	2.295
	150	3.432
	200	4.524
	300	7.358
	400	9.958

Valores certificados por:
Values certified by:
Valeurs certifiées par:
Valores certificados por:

304 316L — 35

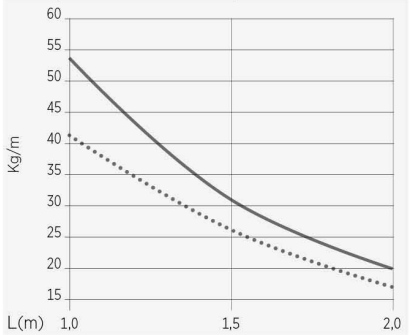

304 316		mm²
35	100	2.295
	200	4.524
	300	7.358
	400	9.958

Valores certificados por:
Values certified by:
Valeurs certifiées par:
Valores certificados por:

Product applications

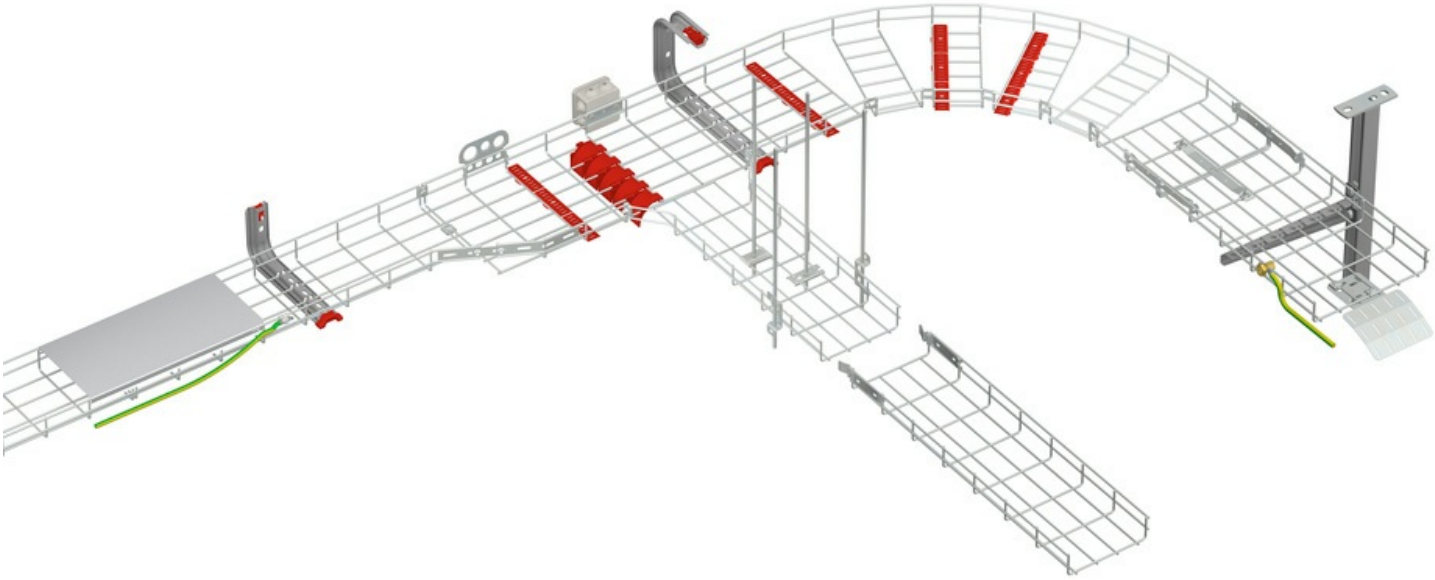

Any information included in this document is property of Pemsa®. It cannot be copied, total or partially, nor disclosed to third parties nor used without the explicit and written authorization by Pemsa®. These documents total or partially, can be subject to patent and/or be patent pending and therefore protected by intellectual and industrial property rights. Pemsa, Rejiband, Pemsaband, Inducanal, Rejitech, Megaband, Pemsaflex are registered trademarks property of "Pemsa Cable Management, S.A."

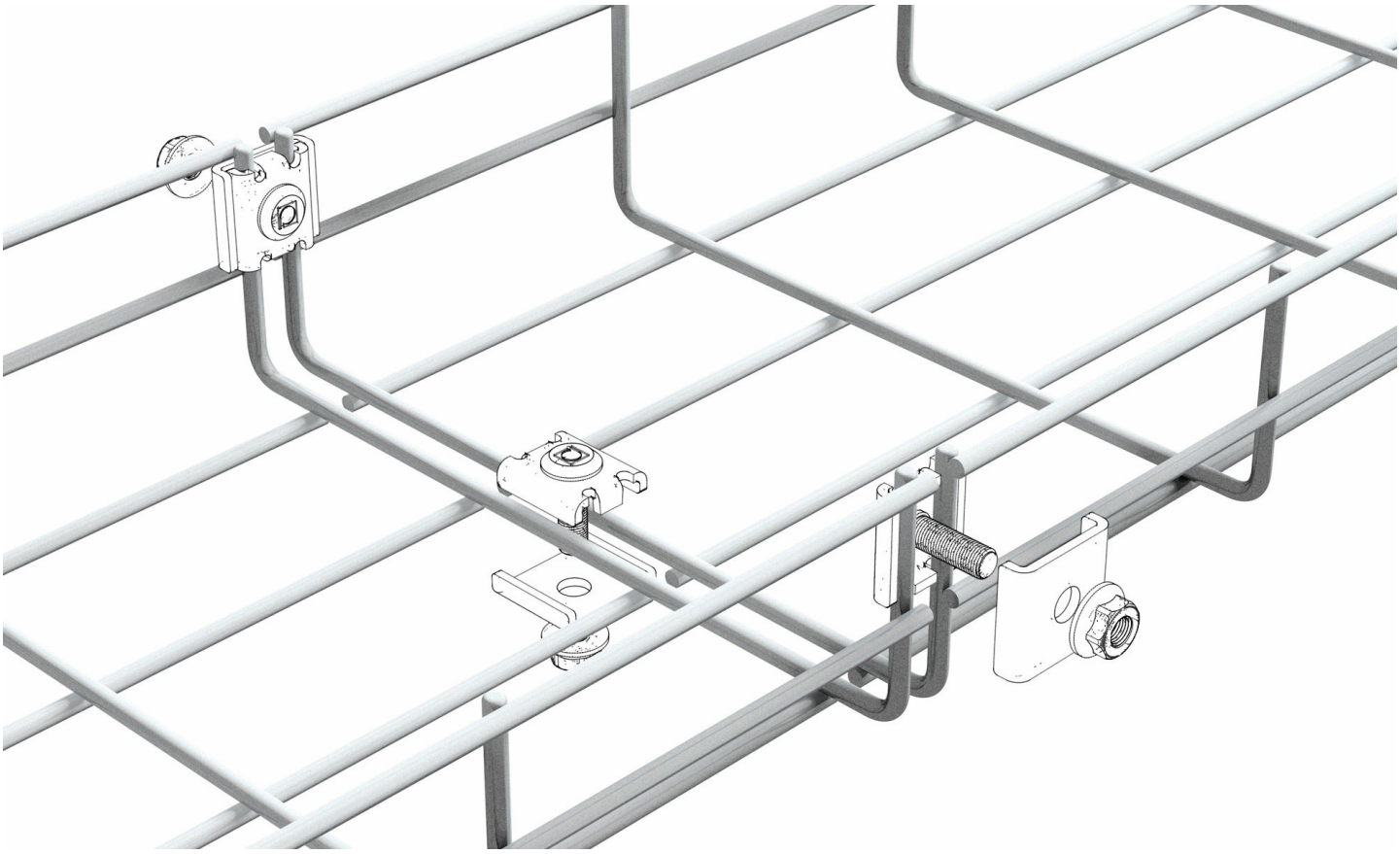

Any information included in this document is property of Pemsa®. It cannot be copied, total or partially, nor disclosed to third parties nor used without the explicit and written authorization by Pemsa®. These documents total or partially, can be subject to patent and/or be patent pending and therefore protected by intellectual and industrial property rights. Pemsa, Rejiband, Pemsaband, Inducanal, Rejitech, Megaband, Pemsaflex are registered trademarks property of "Pemsa Cable Management, S.A."