End Cap

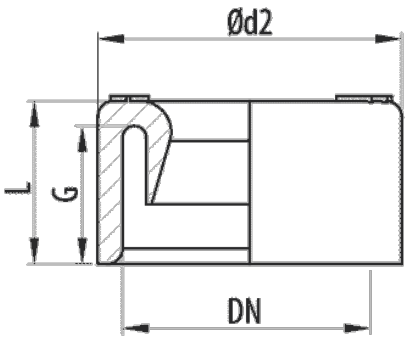

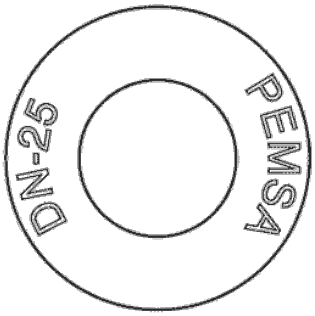

Description

Plastic terminal for the protection of the cable exit in the ends of RR and RL rigid conduits. Made of translucent polyethylene for the protection of the exit of the cable in the end of the corrugated conduit. Available in several sizes.

Advantages

It protects the exit of cables from friction or superficial damages.

Available in various sizes.

Perfect adjustment on the end of the conduit.

CE conformity to the 2014/35 directive and the IEC 61386 standard.

Applications

Suitable for the protection of the ends of RL, RR, RLGC, RRGC, RAL, RINOX metal rigid conduit in building, tertiary and industrial applications with high safety requirements. Premises of public attendance or with risk of fire or explosion.

Solutions

Any information included in this document is property of Pemsa®. It cannot be copied, total or partially, nor disclosed to third parties nor used without the explicit and written authorization by Pemsa®. These documents total or partially, can be subject to patent and/or be patent pending and therefore protected by intellectual and industrial property rights. Pemsa, Rejiband, Pemsaband, Inducanal, Rejitech, Megaband, Pemsaflex are registered trademarks property of "Pemsa Cable Management, S.A."

End Cap

Main technical characteristics

Colour	DN				ETIM
Grey RAL 7035	NW16, NW20, NW25, NW32, NW40, NW50, NW63	PVC	-5 / 60 °C	Flame retardant	EC000519

Product data

DN	Ref	kg/u	
NW16	55111016	0.001	100
NW20	55111020	0.002	100
NW25	55111025	0.005	100
NW32	55111032	0.007	50
NW40	55111040	0.011	
NW50	55111050	0.018	25
NW63	55111063	0.025	20

Protection System

CU - Copper electroplated

PG - Pregalvanised

EZ - Electrogalvanised

BC - Electrogalvanised Bichromate

BK8 - High Resistance Coating

GC - Hot Dip Galvanising

INOX - Stainless Steel

PT - Polyester Paint

AL - Aluminum

LN - Brass or Nickel-plated brass

Insulating materials

PC+ABS - Halogen Free Polycarbonate + ABS

PVC - Polyvinyl Chloride

PP - Halogen Free Polypropylene

PA6 - Halogen Free Polyamide 6

PA12 - Halogen Free Polyamide 12

PU - Polyurethane

PE - Polyethylene

NBR - NBR rubber

PET - Thermoplastic Polyester

TPV - Thermoplastic

Any information included in this document is property of Pemsa®. It cannot be copied, total or partially, nor disclosed to third parties nor used without the explicit and written authorization by Pemsa®. These documents total or partially, can be subject to patent and/or be patent pending and therefore protected by intellectual and industrial property rights. Pemsa, Rejiband, Pemsaband, Inducanal, Rejitech, Megaband, Pemsaflex are registered trademarks property of "Pemsa Cable Management, S.A."