Mini Universal Bracket

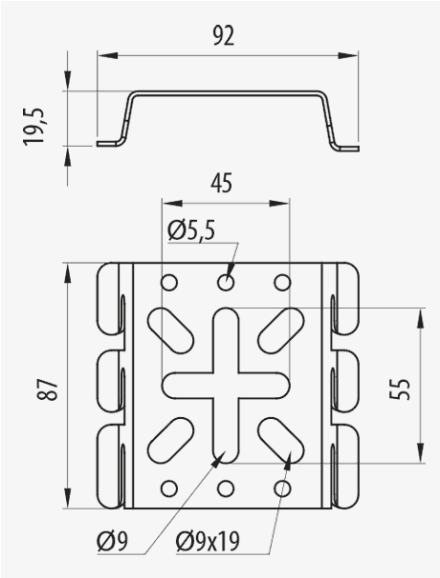

Description

Mini Universal steel bracket in various protection systems for the wall mounting of Rejiband® trays by means of the fast click connection system without the need of screws. The wall bracket is suitable for Rejiband® trays of 100 and 150 mm width in a horizontal or vertical position, as well as for attaching boxes or other accessories. Depending on the Protection System it can be used in many different installations.

Advantages

Fixing by quick click system.

Simple and quick assembly without the need of special tools.

Supports can be mounted on the side or base of the tray.

Available in various protection systems: PG, HC, BK8 and passivated stainless steel AISI 316.

Applications

Suitable for the support of trays to the wall or for the installation of boxes or other devices on Rejiband wire mesh trays intended for the management of cables in electrical and telecommunications installations in public buildings, infrastructures and civil works, industrial installations and tertiary sector.

Solutions

INDUSTRIA ALIMENTARIA FOTOVOLTAICA

Any information included in this document is property of Pemsa®. It cannot be copied, total or partially, nor disclosed to third parties nor used without the explicit and written authorization by Pemsa®. These documents total or partially, can be subject to patent and/or be patent pending and therefore protected by intellectual and industrial property rights. Pemsa, Rejiband, Pemsaband, Inducanal, Rejitech, Megaband, Pemsaflex are registered trademarks property of "Pemsa Cable Management, S.A."

Mini Universal Bracket

Main technical characteristics

10	-50 / 150 °C	A1 No combustible	ETIM EC000022

Product data

Ⓢ	Class IEC 61537	REF	kg/u	Ⓜ
PG	Class 3	62026010	0.094	Steel with surface coating
GC	Class 8	62036010	0.098	Steel with surface coating
INOX	Class 9D	62066010	0.075	Acero inoxidable AISI 316L
BK8	Class 8	62086010	0.096	Steel with surface coating

Ⓢ Protection System

CU - Copper electroplated

PG - Pregalvanised

EZ - Electrogalvanised

BC - Electrogalvanised Bichromate

BK8 - High Resistance Coating

GC - Hot Dip Galvanising

INOX - Stainless Steel

PT - Polyester Paint

AL - Aluminum

LN - Brass or Nickel-plated brass

Ⓜ Insulating materials

PC+ABS - Halogen Free Polycarbonate + ABS

PVC - Polyvinyl Chloride

PP - Halogen Free Polypropylene

PA6 - Halogen Free Polyamide 6

PA12 - Halogen Free Polyamide 12

PU - Polyurethane

PE - Polyethylene

NBR - NBR rubber

PET - Thermoplastic Polyester

TPV - Thermoplastic

Any information included in this document is property of Pemsa®. It cannot be copied, total or partially, nor disclosed to third parties nor used without the explicit and written authorization by Pemsa®. These documents total or partially, can be subject to patent and/or be patent pending and therefore protected by intellectual and industrial property rights. Pemsa, Rejiband, Pemsaband, Inducanal, Rejitech, Megaband, Pemsaflex are registered trademarks property of "Pemsa Cable Management, S.A."

Product applications

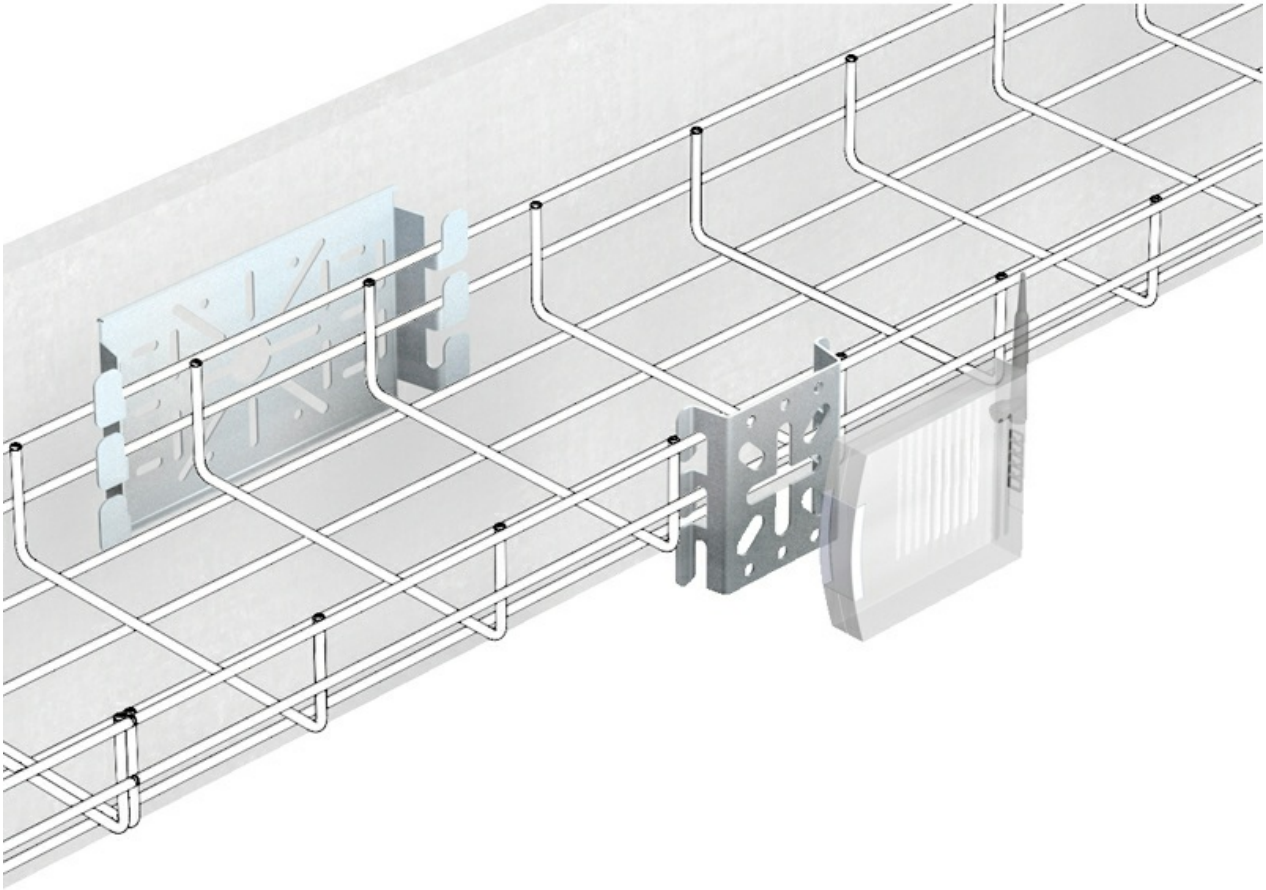

Any information included in this document is property of Pemsa®. It cannot be copied, total or partially, nor disclosed to third parties nor used without the explicit and written authorization by Pemsa®. These documents total or partially, can be subject to patent and/or be patent pending and therefore protected by intellectual and industrial property rights. Pemsa, Rejiband, Pemsaband, Inducanal, Rejitech, Megaband, Pemsaflex are registered trademarks property of "Pemsa Cable Management, S.A."

Mini Universal Bracket

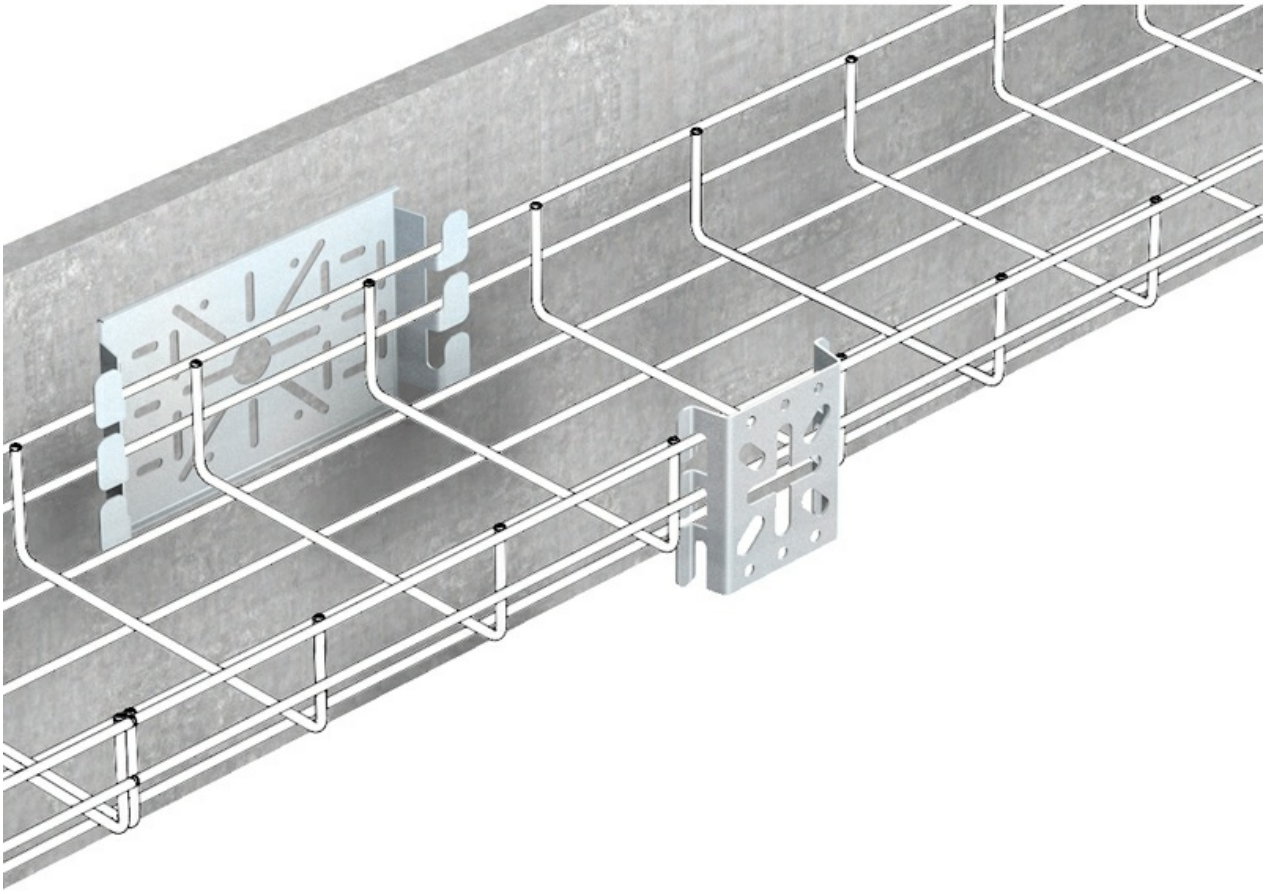

Any information included in this document is property of Pemsa®. It cannot be copied, total or partially, nor disclosed to third parties nor used without the explicit and written authorization by Pemsa®. These documents total or partially, can be subject to patent and/or be patent pending and therefore protected by intellectual and industrial property rights. Pemsa, Rejiband, Pemsaband, Inducanal, Rejitech, Megaband, Pemsaflex are registered trademarks property of "Pemsa Cable Management, S.A."

Mini Universal Bracket

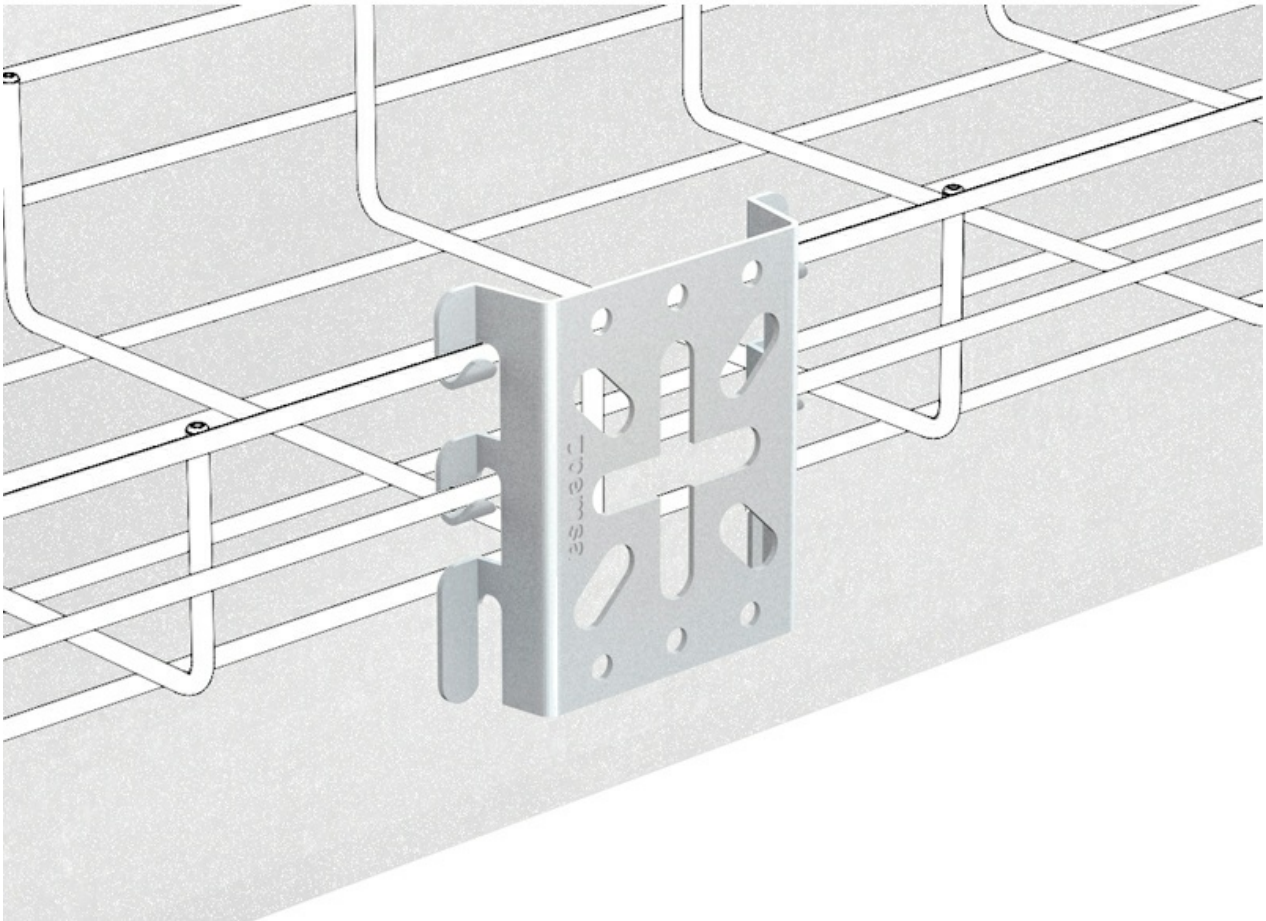

Any information included in this document is property of Pemsa®. It cannot be copied, total or partially, nor disclosed to third parties nor used without the explicit and written authorization by Pemsa®. These documents total or partially, can be subject to patent and/or be patent pending and therefore protected by intellectual and industrial property rights. Pemsa, Rejiband, Pemsaband, Inducanal, Rejitech, Megaband, Pemsaflex are registered trademarks property of "Pemsa Cable Management, S.A."