Joint Clip

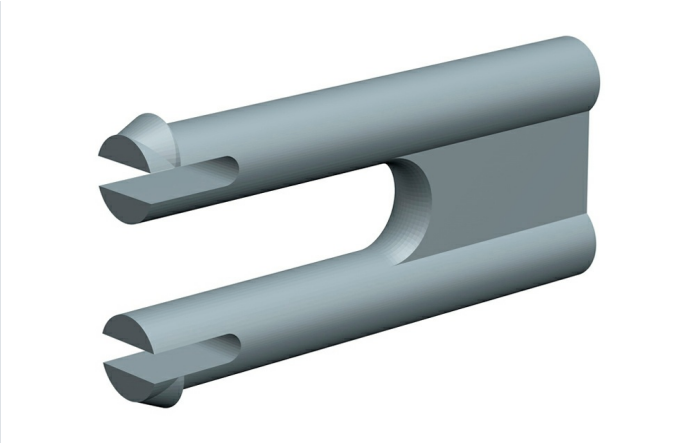

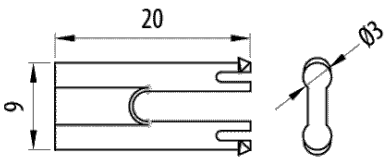

Description

Joint clip for self-extinguishing halogen-free polyamide 6 clips, available in RAL 7011 grey and RAL 9005 black for flexible conduits from the Pemsaflex® range.

Advantages

Manufactured in polyamide 6. Self-extinguishing, halogen-free according to UNE/EN 60754-2 y UNE/EN 60754-1 and flame-retardant.

It allows the connection of tube supports for the fixing of flexible conduits in the Pemsaflex® range.

Working temperature: -25°C to + 105°C.

Available in two colours: Grey RAL 7011 and black RAL 9005.

CE conformity to the 2014/35 directive and the IEC 61386 standard.

Applications

Suitable for fixing Pemsaflex®, LG-PA, ST-PA, RF-PA, RB-PA and RB-PU conduits for the protection of wiring and conductors in electrical installations of machines, tools, industrial equipment, robots, vehicles and special facilities.

Solutions

Any information included in this document is property of Pemsa®. It cannot be copied, total or partially, nor disclosed to third parties nor used without the explicit and written authorization by Pemsa®. These documents total or partially, can be subject to patent and/or be patent pending and therefore protected by intellectual and industrial property rights. Pemsa, Rejiband, Pemsaband, Inducanal, Rejitech, Megaband, Pemsaflex are registered trademarks property of "Pemsa Cable Management, S.A."

Joint Clip

Main technical characteristics

Colour Grey RAL 7011, Black RAL 9005	kg/u 0.001	100	Poyamide 6	-25 / 105 ºC
LIBRE DE HALÓGENOS,NO PROPAGADOR DE LA LLAMA	ETIM -			

Product data

Colour	Ref
Grey RAL 7011	31097500
Black RAL 9005	32097500

Protection System

CU - Copper electroplated

PG - Pregalvanised

EZ - Electrogalvanised

BC - Electrogalvanised Bichromate

BK8 - High Resistance Coating

GC - Hot Dip Galvanising

INOX - Stainless Steel

PT - Polyester Paint

AL - Aluminum

LN - Brass or Nickel-plated brass

Insulating materials

PC+ABS - Halogen Free Polycarbonate + ABS

PVC - Polyvinyl Chloride

PP - Halogen Free Polypropylene

PA6 - Halogen Free Polyamide 6

PA12 - Halogen Free Polyamide 12

PU - Polyurethane

PE - Polyethylene

NBR - NBR rubber

PET - Thermoplastic Polyester

TPV - Thermoplastic

Any information included in this document is property of Pemsa®. It cannot be copied, total or partially, nor disclosed to third parties nor used without the explicit and written authorization by Pemsa®. These documents total or partially, can be subject to patent and/or be patent pending and therefore protected by intellectual and industrial property rights. Pemsa, Rejiband, Pemsaband, Inducanal, Rejitech, Megaband, Pemsaflex are registered trademarks property of "Pemsa Cable Management, S.A."