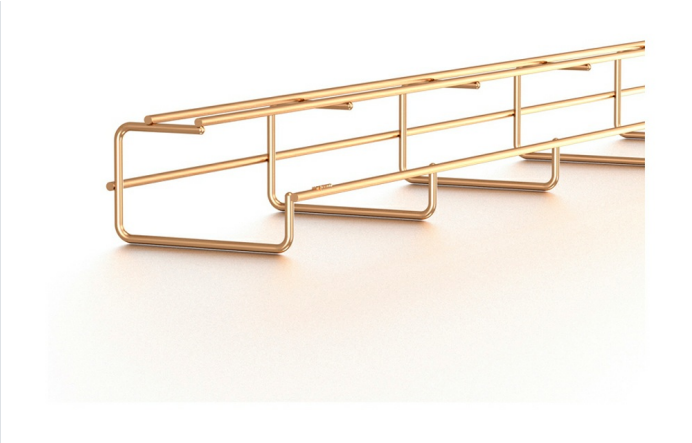

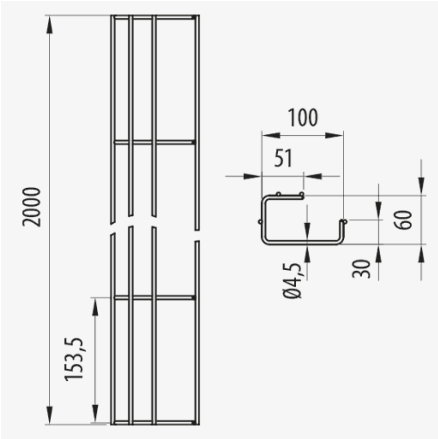

Description

60 mm high steel wire mesh tray with surface protection and safety edge for the support and management of electric cables in false ceilings. It is fixed to the ceiling without additional support by using just the Rejitech fastener. It has an open structure that allows the lateral introduction of the cables therefore reducing the installation time. It is supplied in 2 m lengths.

Advantages

Direct fixing to the ceiling without additional support by using just the Rejitech Fastener.

Cables are kept tidy and with maximum ventilation.

Installation in false ceilings or confined spaces.

Quick installation by just one person.

It installs quickly without the need for joints or bends.

Applications

Suitable for the management and distribution of cables in electrical and/or telecommunications in industrial installations, Civil Works and Infrastructures, tunnels and inspection galleries. It is mainly used for installations in false ceilings due to its height of 60 mm allowing it to be accommodated in reduced spaces.

Solutions

INDUSTRIA PETROQUÍMICA ENERGÍA FOTOVOLTAICA CENTROS DE DATOS EDIFICACIÓN. TERCIARIO SECTOR FERROVIARIO RESISTENCIA AL FUEGO

Any information included in this document is property of Pemsa®. It cannot be copied, total or partially, nor disclosed to third parties nor used without the explicit and written authorization by Pemsa®. These documents total or partially, can be subject to patent and/or be patent pending and therefore protected by intellectual and industrial property rights. Pemsa, Rejiband, Pemsaband, Inducanal, Rejitech, Megaband, Pemsaflex are registered trademarks property of "Pemsa Cable Management, S.A."

Main technical characteristics

ETIM
EC000853

Product data

Ⓢ	Class IEC 61537			mm²		REF	kg/u		Ⓜ		mm²		
EZ	Class 3	60	100	4	2	60215020	0.548	16	Steel with surface coating	20 J	2335	-50 / 150 ºC	A1 No combustible

Ⓢ Protection System

CU - Copper electroplated

PG - Pregalvanised

EZ - Electrogalvanised

BC - Electrogalvanised Bichromate

BK8 - High Resistance Coating

GC - Hot Dip Galvanising

INOX - Stainless Steel

PT - Polyester Paint

AL - Aluminum

LN - Brass or Nickel-plated brass

Ⓜ Insulating materials

PC+ABS - Halogen Free Polycarbonate + ABS

PVC - Polyvinyl Chloride

PP - Halogen Free Polypropylene

PA6 - Halogen Free Polyamide 6

PA12 - Halogen Free Polyamide 12

PU - Polyurethane

PE - Polyethylene

NBR - NBR rubber

PET - Thermoplastic Polyester

TPV - Thermoplastic

Any information included in this document is property of Pemsa®. It cannot be copied, total or partially, nor disclosed to third parties nor used without the explicit and written authorization by Pemsa®. These documents total or partially, can be subject to patent and/or be patent pending and therefore protected by intellectual and industrial property rights. Pemsa, Rejiband, Pemsaband, Inducanal, Rejitech, Megaband, Pemsaflex are registered trademarks property of "Pemsa Cable Management, S.A."

Product applications

Any information included in this document is property of Pemsa®. It cannot be copied, total or partially, nor disclosed to third parties nor used without the explicit and written authorization by Pemsa®. These documents total or partially, can be subject to patent and/or be patent pending and therefore protected by intellectual and industrial property rights. Pemsa, Rejiband, Pemsaband, Inducanal, Rejitech, Megaband, Pemsaflex are registered trademarks property of "Pemsa Cable Management, S.A."

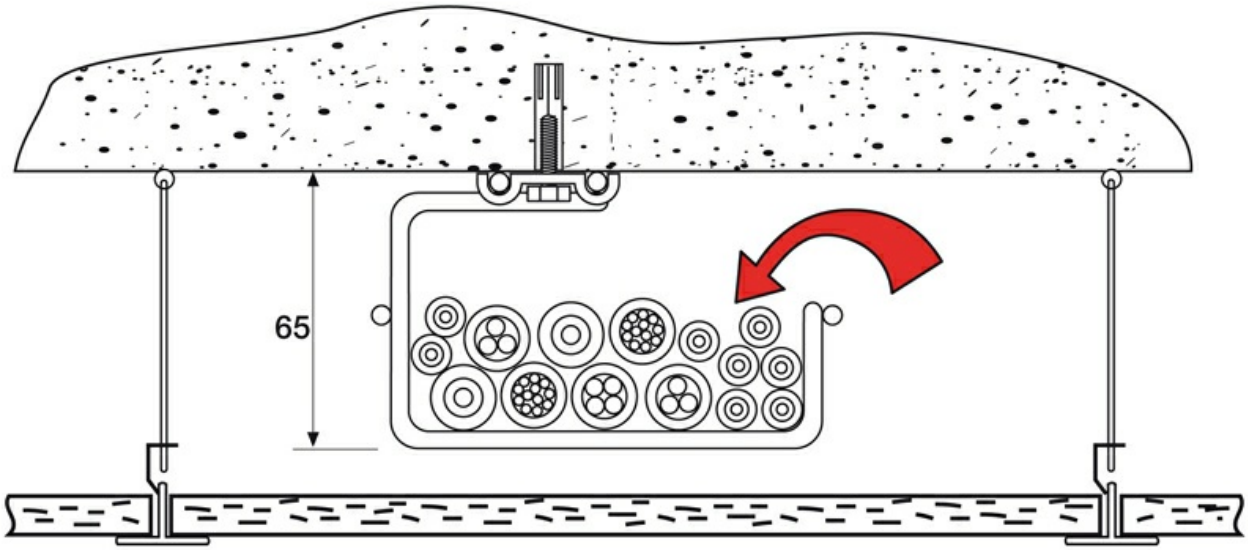

Any information included in this document is property of Pemsa®. It cannot be copied, total or partially, nor disclosed to third parties nor used without the explicit and written authorization by Pemsa®. These documents total or partially, can be subject to patent and/or be patent pending and therefore protected by intellectual and industrial property rights. Pemsa, Rejiband, Pemsaband, Inducanal, Rejitech, Megaband, Pemsaflex are registered trademarks property of "Pemsa Cable Management, S.A."