PEMSAband / MEGABAND Riser / Dropper

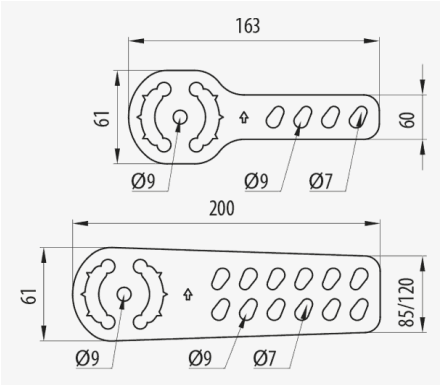

Description

Metal part for the creation of adjustable angle level changes with Megaband® ladder and Pemsaband® cable tray , by using m8 bolts and hexagonal nuts whilst also maintaining the electrical continuity, according to IEC 61537.

Advantages

Thanks to the articulation it allows the creation of level changes.

Requires M8 hexagonal bolts and nuts.

Also compatible with Pemsaband® One perforated and solid sheet trays.

Electrical continuity guaranteed according to standard IEC61537.

Available in various protection systems: EZ, GC and stainless steel AISI 304 and AISI 316L.

Applications

The Megaband® ladder is designed to be able to make level changes of cable management in electrical and telecommunications installations in public buildings, infrastructures and civil works, tertiary sector and industrial applications. Compatibility with the Pemsaband® One perforated and solid ranges.

Solutions

Any information included in this document is property of Pemsa®. It cannot be copied, total or partially, nor disclosed to third parties nor used without the explicit and written authorization by Pemsa®. These documents total or partially, can be subject to patent and/or be patent pending and therefore protected by intellectual and industrial property rights. Pemsa, Rejiband, Pemsaband, Inducanal, Rejitech, Megaband, Pemsaflex are registered trademarks property of "Pemsa Cable Management, S.A."

PEMSAband / MEGABAND Riser / Dropper

Main technical characteristics

60, 100 | 8 | -50 / 150 °C | A1 No combustible | ETIM EC002413

Product data

Ⓢ	Class IEC 61537		REF	kg/u	Ⓜ
EZ	Class 3	60	93910012	0.058	Steel with surface coating
EZ	Class 3	100	93910013	0.101	Steel with surface coating
GC	Class 8	60	93930012	0.060	Steel with surface coating
GC	Class 8	100	93930013	0.110	Steel with surface coating
INOX	Class 9C	60	93950012	0.057	Stainless steel AISI 304
INOX	Class 9D	60	93960012	0.057	Acero inoxidable AISI 316L

Ⓢ Protection System

CU - Copper electroplated

PG - Pregalvanised

EZ - Electrogalvanised

BC - Electrogalvanised Bichromate

BK8 - High Resistance Coating

GC - Hot Dip Galvanising

INOX - Stainless Steel

PT - Polyester Paint

AL - Aluminum

LN - Brass or Nickel-plated brass

Ⓜ Insulating materials

PC+ABS - Halogen Free Polycarbonate + ABS

PVC - Polyvinyl Chloride

PP - Halogen Free Polypropylene

PA6 - Halogen Free Polyamide 6

PA12 - Halogen Free Polyamide 12

PU - Polyurethane

PE - Polyethylene

NBR - NBR rubber

PET - Thermoplastic Polyester

TPV - Thermoplastic

Any information included in this document is property of Pemsa®. It cannot be copied, total or partially, nor disclosed to third parties nor used without the explicit and written authorization by Pemsa®. These documents total or partially, can be subject to patent and/or be patent pending and therefore protected by intellectual and industrial property rights. Pemsa, Rejiband, Pemsaband, Inducanal, Rejitech, Megaband, Pemsaflex are registered trademarks property of "Pemsa Cable Management, S.A."

PEMSAband / MEGABAND Riser / Dropper

Product applications

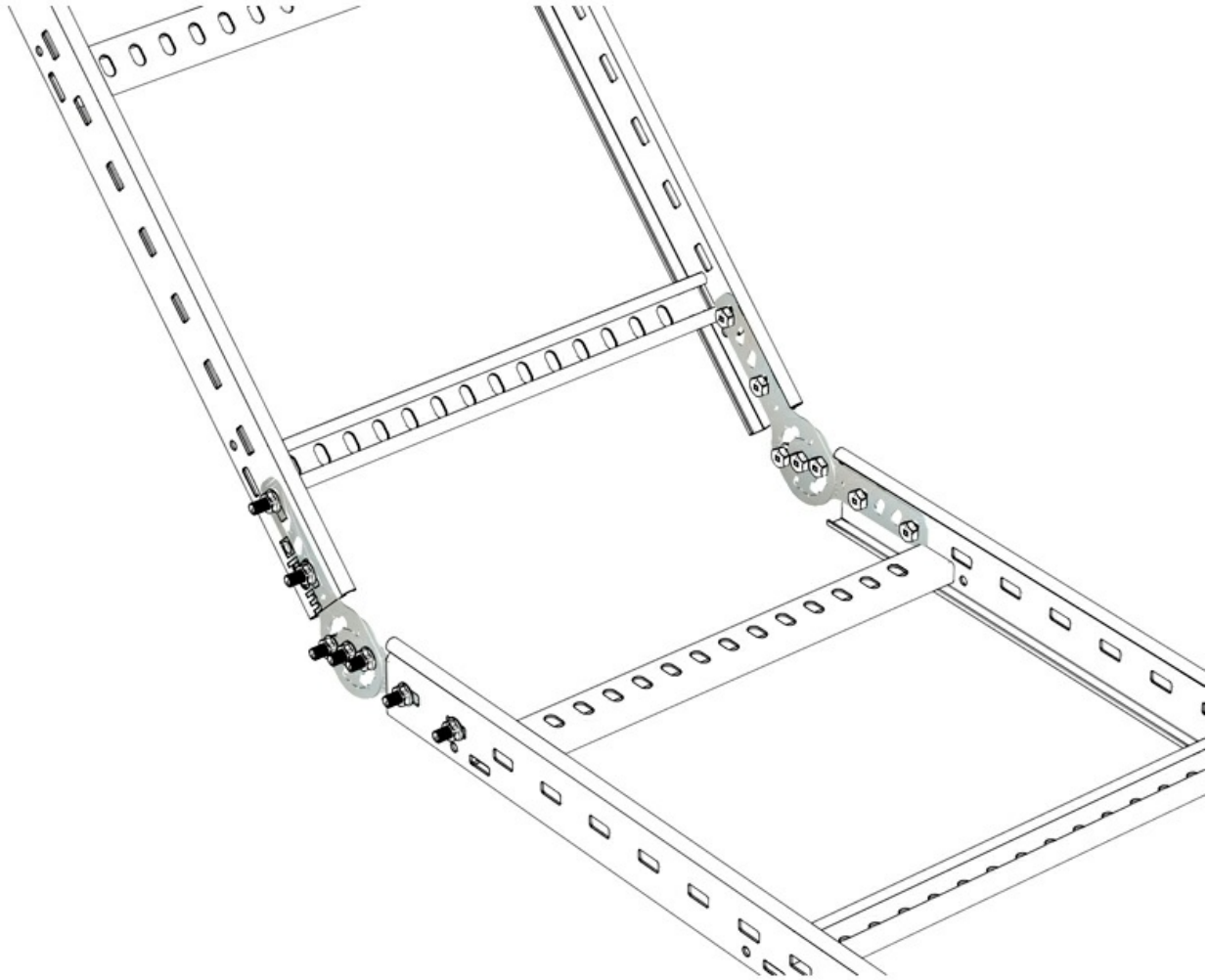

Any information included in this document is property of Pemsa®. It cannot be copied, total or partially, nor disclosed to third parties nor used without the explicit and written authorization by Pemsa®. These documents total or partially, can be subject to patent and/or be patent pending and therefore protected by intellectual and industrial property rights. Pemsa, Rejiband, Pemsaband, Inducanal, Rejitech, Megaband, Pemsaflex are registered trademarks property of "Pemsa Cable Management, S.A."

PEMSAband / MEGABAND Riser / Dropper

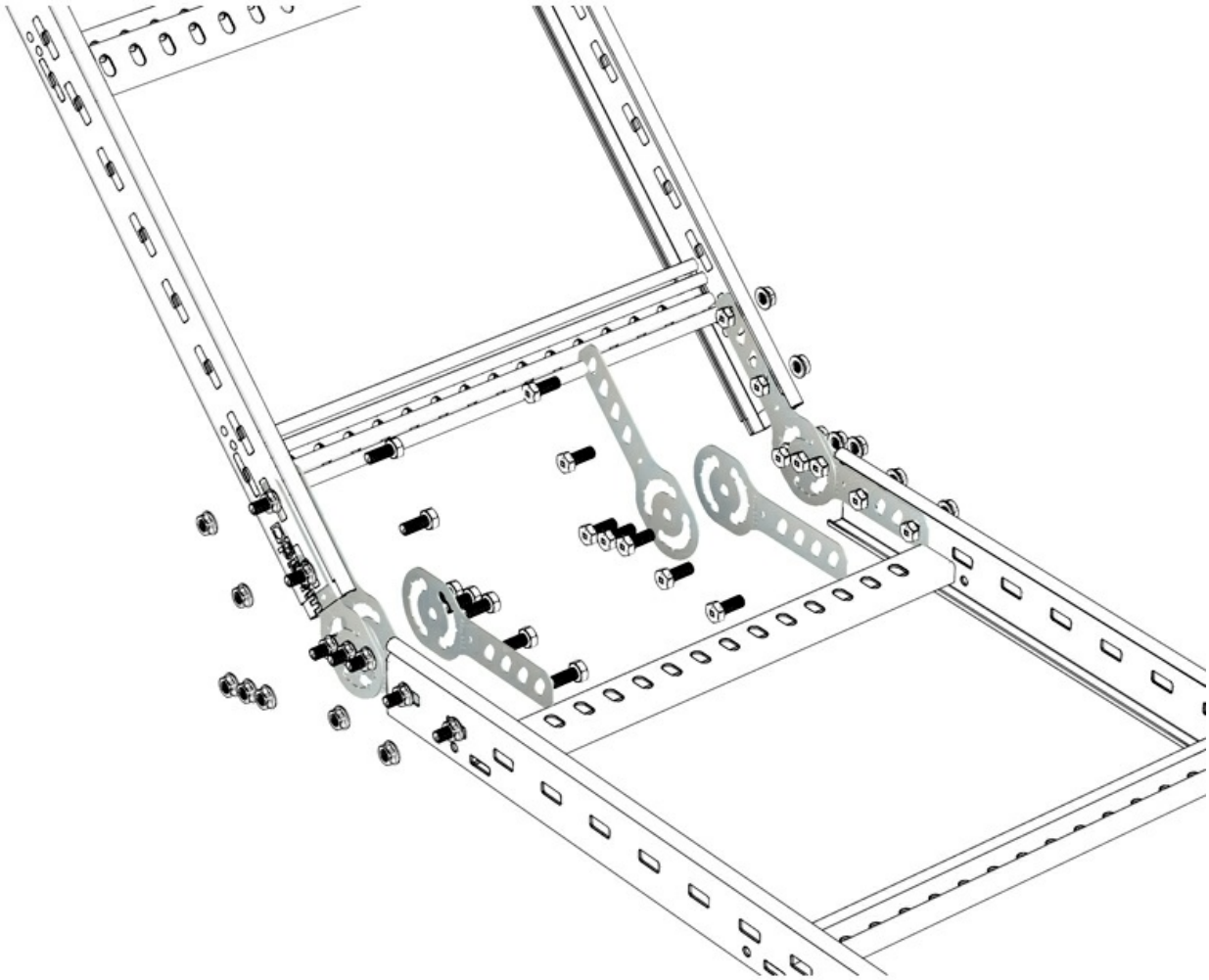

Any information included in this document is property of Pemsa®. It cannot be copied, total or partially, nor disclosed to third parties nor used without the explicit and written authorization by Pemsa®. These documents total or partially, can be subject to patent and/or be patent pending and therefore protected by intellectual and industrial property rights. Pemsa, Rejiband, Pemsaband, Inducanal, Rejitech, Megaband, Pemsaflex are registered trademarks property of "Pemsa Cable Management, S.A."

PEMSAband / MEGABAND Riser / Dropper

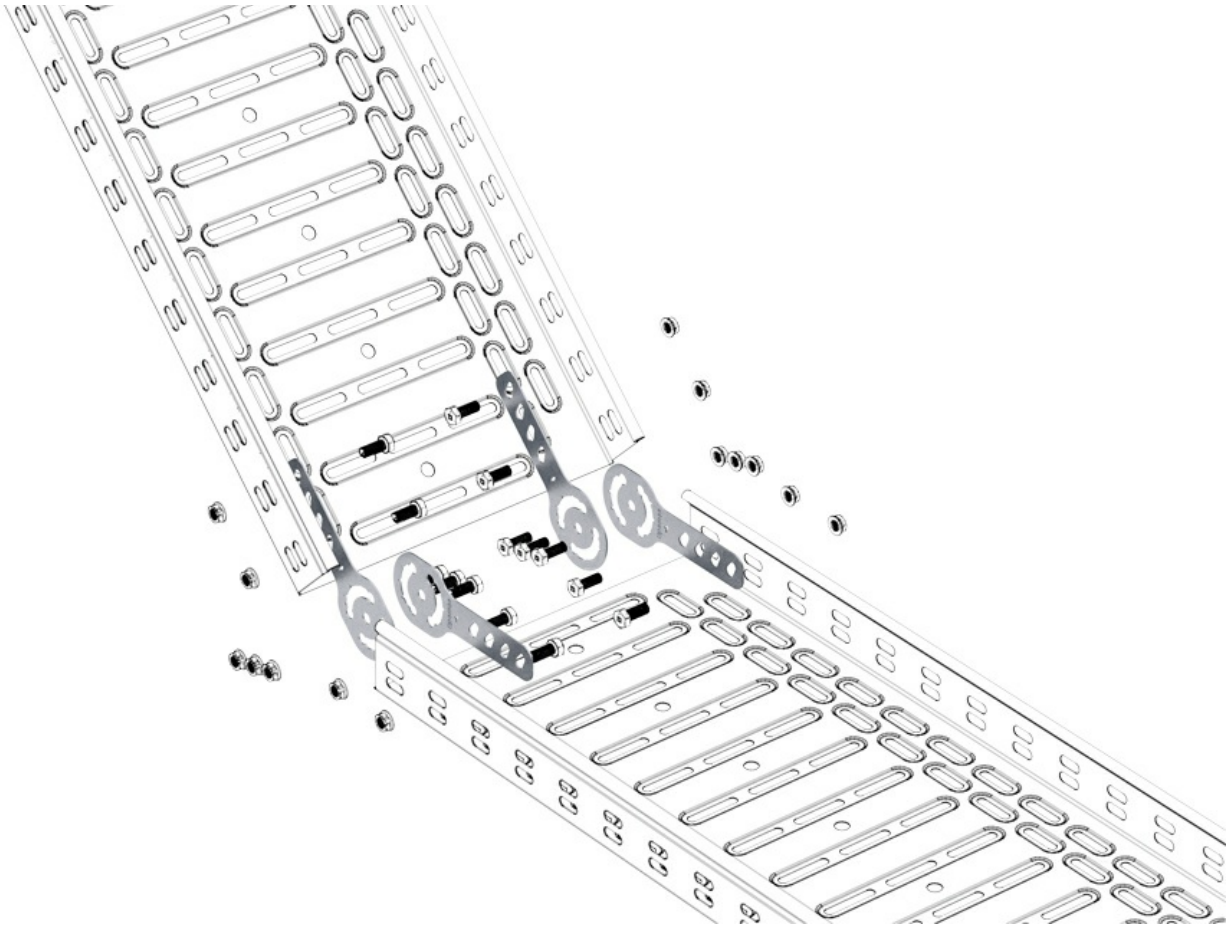

Any information included in this document is property of Pemsa®. It cannot be copied, total or partially, nor disclosed to third parties nor used without the explicit and written authorization by Pemsa®. These documents total or partially, can be subject to patent and/or be patent pending and therefore protected by intellectual and industrial property rights. Pemsa, Rejiband, Pemsaband, Inducanal, Rejitech, Megaband, Pemsaflex are registered trademarks property of "Pemsa Cable Management, S.A."

PEMSAband / MEGABAND Riser / Dropper

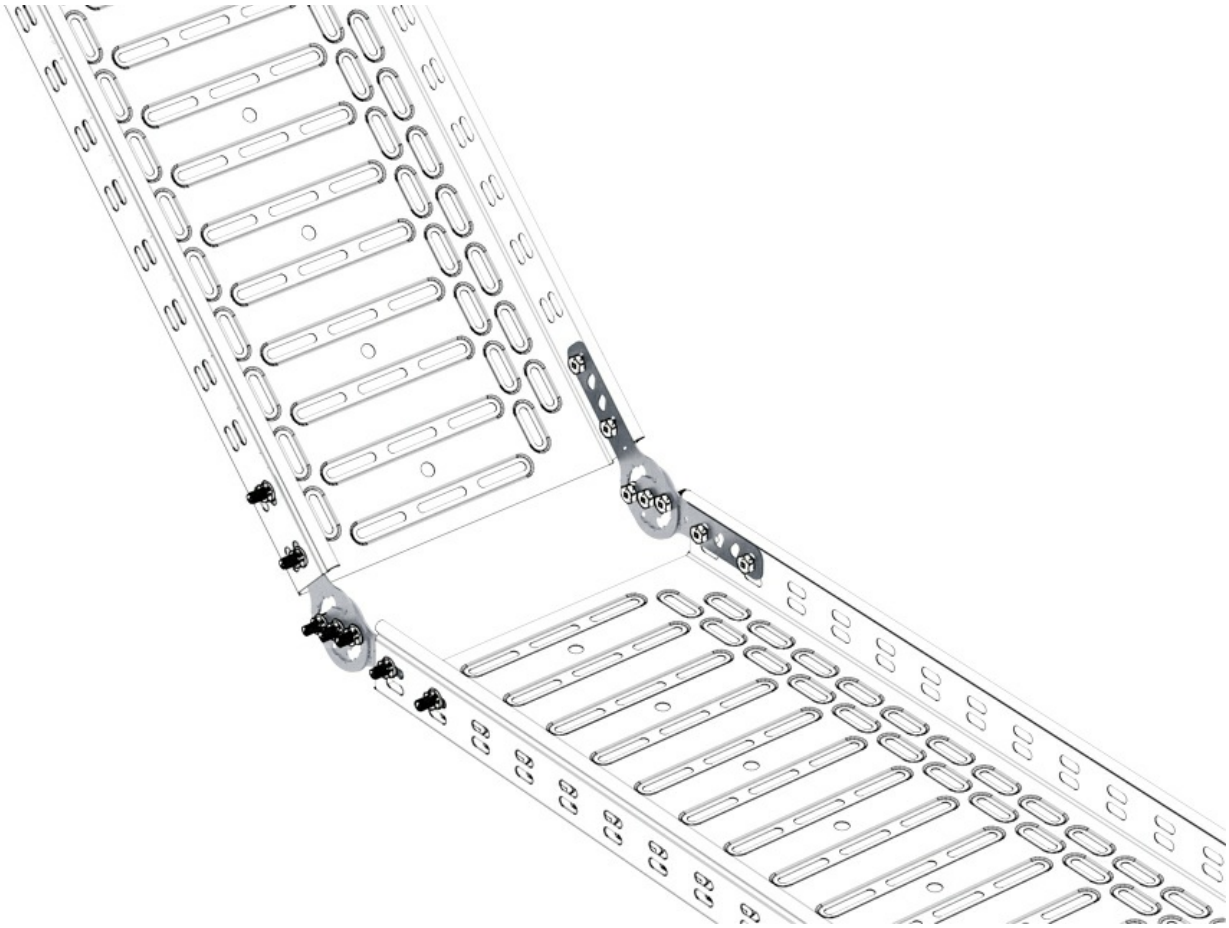

Any information included in this document is property of Pemsa®. It cannot be copied, total or partially, nor disclosed to third parties nor used without the explicit and written authorization by Pemsa®. These documents total or partially, can be subject to patent and/or be patent pending and therefore protected by intellectual and industrial property rights. Pemsa, Rejiband, Pemsaband, Inducanal, Rejitech, Megaband, Pemsaflex are registered trademarks property of "Pemsa Cable Management, S.A."