Articulates Riser Section MEGAband



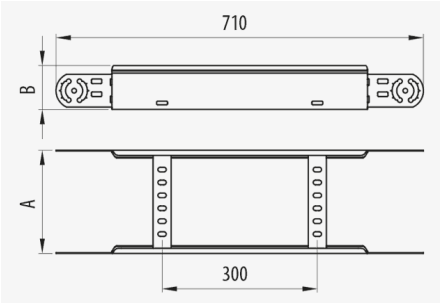

Description

Articulated metal accessory consisting of a straight section with two welded crosspieces, with safety edge for the creation of a level change in the Megaband® ladder. It allows to make rises, drops and changes of height in variable angles of 15, 30, 45 and 90°. Quick connection assembly using the click system, without joints. Made of steel in various sizes and Protection Systems.

Advantages

Use in conjunction with Megaband® articulated riser plates and Megaband® M8 joint kit or M8 nuts and bolts.

Curved safety edge which offers maximum protection.

The angle is variable by 15°, 30°, 45° and 90°. Sections can be coupled together to provide a greater radius for large cables.

Electrical continuity guaranteed according to standard IEC61537.

Available in various protection systems: GC and stainless steel AISI304 and AISI316L.

Applications

Suitable for level changes in cable management in Megaband® ladders in electrical and telecommunications installations in public buildings, infrastructures and civil works, industrial facilities, tertiary sector.

Solutions

Any information included in this document is property of Pemsa®. It cannot be copied, total or partially, nor disclosed to third parties nor used without the explicit and written authorization by Pemsa®. These documents total or partially, can be subject to patent and/or be patent pending and therefore protected by intellectual and industrial property rights. Pemsa, Rejiband, Pemsaband, Inducanal, Rejitech, Megaband, Pemsaflex are registered trademarks property of "Pemsa Cable Management, S.A."

Articulates Riser Section MEGAband

Main technical characteristics

60, 100, 120, 150 | 100, 150, 200, 300, 400, 450, 500, 600 | 1 | 20 J | -50 / 150 °C | A1 No combustible

ETIM 10
EC001535

Product data

S	Class IEC 61537			REF	kg/u	M
PG	Class 3	60	100	93412100	1,320	Steel with surface coating
PG	Class 3	60	150	93412150	1,400	Steel with surface coating
PG	Class 3	60	200	93412200	1,490	Steel with surface coating
PG	Class 3	60	300	93412300	1,650	Steel with surface coating
PG	Class 3	60	400	93412400	1,860	Steel with surface coating
PG	Class 3	60	450	93412450	1,940	Steel with surface coating
PG	Class 3	60	500	93412500	2,030	Steel with surface coating
PG	Class 3	60	600	93412600	2,190	Steel with surface coating
PG	Class 3	100	100	93414100	1,861	Steel with surface coating
PG	Class 3	100	150	93414150	1,941	Steel with surface coating
PG	Class 3	100	200	93414200	2,031	Steel with surface coating
PG	Class 3	100	300	93414300	2,191	Steel with surface coating
PG	Class 3	100	400	93414400	2,361	Steel with surface coating
PG	Class 3	100	450	93414450	2,451	Steel with surface coating
PG	Class 3	100	500	93414500	2,521	Steel with surface coating
PG	Class 3	100	600	93414600	2,431	Steel with surface coating
PG	Class 3	120	100	93415100	2,091	Steel with surface coating
PG	Class 3	120	150	93415150	2,171	Steel with surface coating
PG	Class 3	120	200	93415200	2,261	Steel with surface coating
PG	Class 3	120	300	93415300	2,431	Steel with surface coating
PG	Class 3	120	400	93415400	2,441	Steel with surface coating
PG	Class 3	120	450	93415450	2,521	Steel with surface coating
PG	Class 3	120	500	93415500	2,611	Steel with surface coating
PG	Class 3	120	600	93415600	2,771	Steel with surface coating
PG	Class 3	150	200	93416200	2,611	Steel with surface coating
PG	Class 3	150	300	93416300	2,771	Steel with surface coating
PG	Class 3	150	400	93416400	2,941	Steel with surface coating
PG	Class 3	150	450	93416450	3,031	Steel with surface coating
PG	Class 3	150	500	93416500	3,111	Steel with surface coating
PG	Class 3	150	600	93416600	3,271	Steel with surface coating
GC	Class 6	60	100	93432100	1,400	Steel with surface coating
GC	Class 6	60	150	93432150	1,480	Steel with surface coating
GC	Class 6	60	200	93432200	1,580	Steel with surface coating
GC	Class 6	60	300	93432300	1,760	Steel with surface coating
GC	Class 6	60	400	93432400	1,980	Steel with surface coating

Any information included in this document is property of Pemsa®. It cannot be copied, total or partially, nor disclosed to third parties nor used without the explicit and written authorization by Pemsa®. These documents total or partially, can be subject to patent and/or be patent pending and therefore protected by intellectual and industrial property rights. Pemsa, Rejiband, Pemsaband, Inducanal, Rejitech, Megaband, Pemsaflex are registered trademarks property of "Pemsa Cable Management, S.A."

Articulates Riser Section MEGAband

S	Class IEC 61537			REF	kg/u	M
GC	Class 6	60	450	93432450	2,060	Steel with surface coating
GC	Class 6	60	500	93432500	2,150	Steel with surface coating
GC	Class 6	60	600	93432600	2,330	Steel with surface coating
GC	Class 6	100	100	93434100	1,981	Steel with surface coating
GC	Class 6	100	150	93434150	2,061	Steel with surface coating
GC	Class 6	100	200	93434200	2,151	Steel with surface coating
GC	Class 6	100	300	93434300	2,331	Steel with surface coating
GC	Class 6	100	400	93434400	2,511	Steel with surface coating
GC	Class 6	100	450	93434450	2,611	Steel with surface coating
GC	Class 6	100	500	93434500	2,691	Steel with surface coating
GC	Class 6	100	600	93434600	2,871	Steel with surface coating
GC	Class 6	120	100	93435100	2,221	Steel with surface coating
GC	Class 6	120	150	93435150	2,311	Steel with surface coating
GC	Class 6	120	200	93435200	2,401	Steel with surface coating
GC	Class 6	120	300	93435300	2,581	Steel with surface coating
GC	Class 6	120	400	93435400	2,761	Steel with surface coating
GC	Class 6	120	450	93435450	2,851	Steel with surface coating
GC	Class 6	120	500	93435500	2,941	Steel with surface coating
GC	Class 6	120	600	93435600	3,111	Steel with surface coating
GC	Class 6	150	100	93436100	2,691	Steel with surface coating
GC	Class 6	150	150	93436150	2,791	Steel with surface coating
GC	Class 6	150	200	93436200	2,871	Steel with surface coating
GC	Class 6	150	300	93436300	3,061	Steel with surface coating
GC	Class 6	150	400	93436400	3,241	Steel with surface coating
GC	Class 6	150	450	93436450	3,341	Steel with surface coating
GC	Class 6	150	500	93436500	3,421	Steel with surface coating
GC	Class 6	150	600	93436600	3,611	Steel with surface coating
INOX	Class 9C	100	100	93454100	1,851	Stainless steel AISI 304
INOX	Class 9C	100	150	93454150	1,931	Stainless steel AISI 304
INOX	Class 9C	100	200	93454200	2,021	Stainless steel AISI 304
INOX	Class 9C	100	300	93454300	2,181	Stainless steel AISI 304
INOX	Class 9C	100	400	93454400	2,351	Stainless steel AISI 304
INOX	Class 9C	100	450	93454450	2,441	Stainless steel AISI 304
INOX	Class 9C	100	500	93454500	2,521	Stainless steel AISI 304
INOX	Class 9C	100	600	93454600	2,681	Stainless steel AISI 304
INOX	Class 9D	100	100	93464100	1,851	Acero inoxidable AISI 316L
INOX	Class 9D	100	150	93464150	1,931	Acero inoxidable AISI 316L
INOX	Class 9D	100	200	93464200	2,021	Acero inoxidable AISI 316L
INOX	Class 9D	100	300	93464300	2,181	Acero inoxidable AISI 316L
INOX	Class 9D	100	400	93464400	2,351	Acero inoxidable AISI 316L
INOX	Class 9D	100	450	93464450	2,441	Acero inoxidable AISI 316L

Any information included in this document is property of Pemsa®. It cannot be copied, total or partially, nor disclosed to third parties nor used without the explicit and written authorization by Pemsa®. These documents total or partially, can be subject to patent and/or be patent pending and therefore protected by intellectual and industrial property rights. Pemsa, Rejiband, Pemsaband, Inducanal, Rejitech, Megaband, Pemsaflex are registered trademarks property of "Pemsa Cable Management, S.A."

Articulates Riser Section MEGAband

Ⓢ	Class IEC 61537			REF	kg/u	Ⓜ
INOX	Class 9D	100	500	93464500	2,511	Acero inoxidable AISI 316L
INOX	Class 9D	100	600	93464600	2,681	Acero inoxidable AISI 316L

Ⓢ Protection System

CU - Copper electroplated

PG - Pregalvanised

EZ - Electrogalvanised

BC - Electrogalvanised Bichromate

BK8 - High Resistance Coating

GC - Hot Dip Galvanising

INOX - Stainless Steel

PT - Polyester Paint

AL - Aluminum

LN - Brass or Nickel-plated brass

Ⓜ Insulating materials

PC+ABS - Halogen Free Polycarbonate + ABS

PVC - Polyvinyl Chloride

PP - Halogen Free Polypropylene

PA6 - Halogen Free Polyamide 6

PA12 - Halogen Free Polyamide 12

PU - Polyurethane

PE - Polyethylene

NBR - NBR rubber

PET - Thermoplastic Polyester

TPV - Thermoplastic

Any information included in this document is property of Pemsa®. It cannot be copied, total or partially, nor disclosed to third parties nor used without the explicit and written authorization by Pemsa®. These documents total or partially, can be subject to patent and/or be patent pending and therefore protected by intellectual and industrial property rights. Pemsa, Rejiband, Pemsaband, Inducanal, Rejitech, Megaband, Pemsaflex are registered trademarks property of "Pemsa Cable Management, S.A."

Articulates Riser Section MEGAband

Product applications

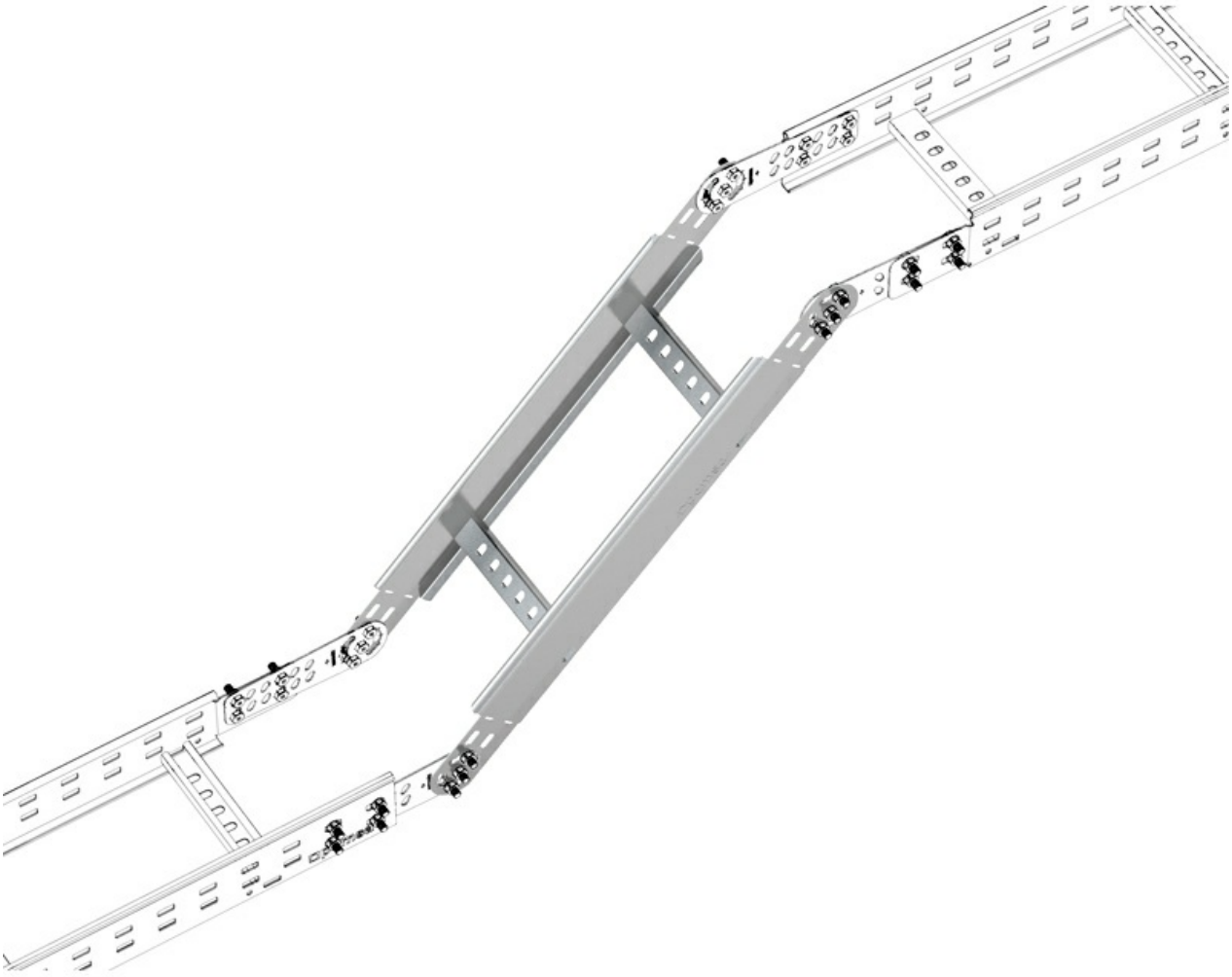

Any information included in this document is property of Pemsa®. It cannot be copied, total or partially, nor disclosed to third parties nor used without the explicit and written authorization by Pemsa®. These documents total or partially, can be subject to patent and/or be patent pending and therefore protected by intellectual and industrial property rights. Pemsa, Rejiband, Pemsaband, Inducanal, Rejitech, Megaband, Pemsaflex are registered trademarks property of "Pemsa Cable Management, S.A."

Articulates Riser Section MEGAband

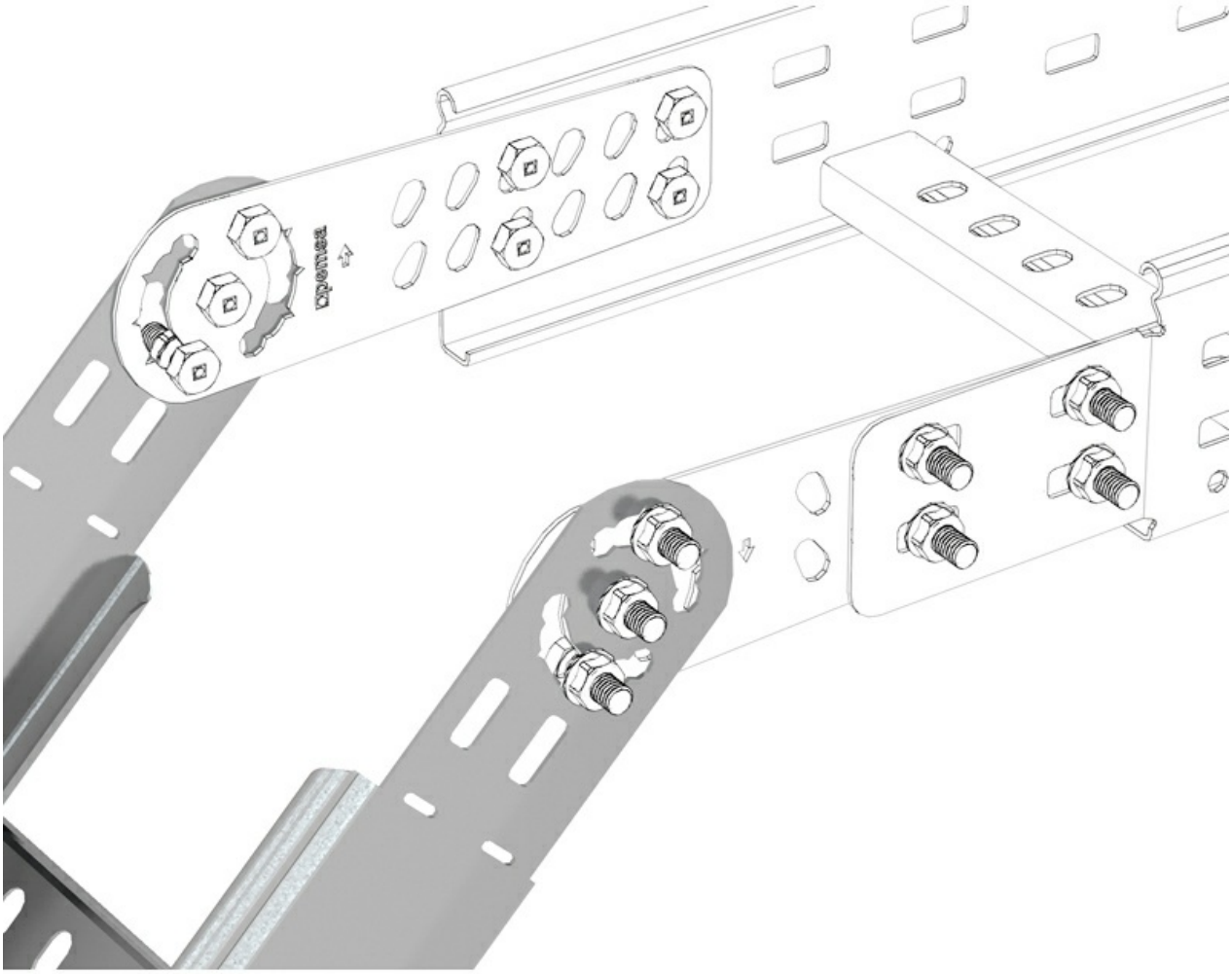

Any information included in this document is property of Pemsa®. It cannot be copied, total or partially, nor disclosed to third parties nor used without the explicit and written authorization by Pemsa®. These documents total or partially, can be subject to patent and/or be patent pending and therefore protected by intellectual and industrial property rights. Pemsa, Rejiband, Pemsaband, Inducanal, Rejitech, Megaband, Pemsaflex are registered trademarks property of "Pemsa Cable Management, S.A."

Articulates Riser Section MEGAband

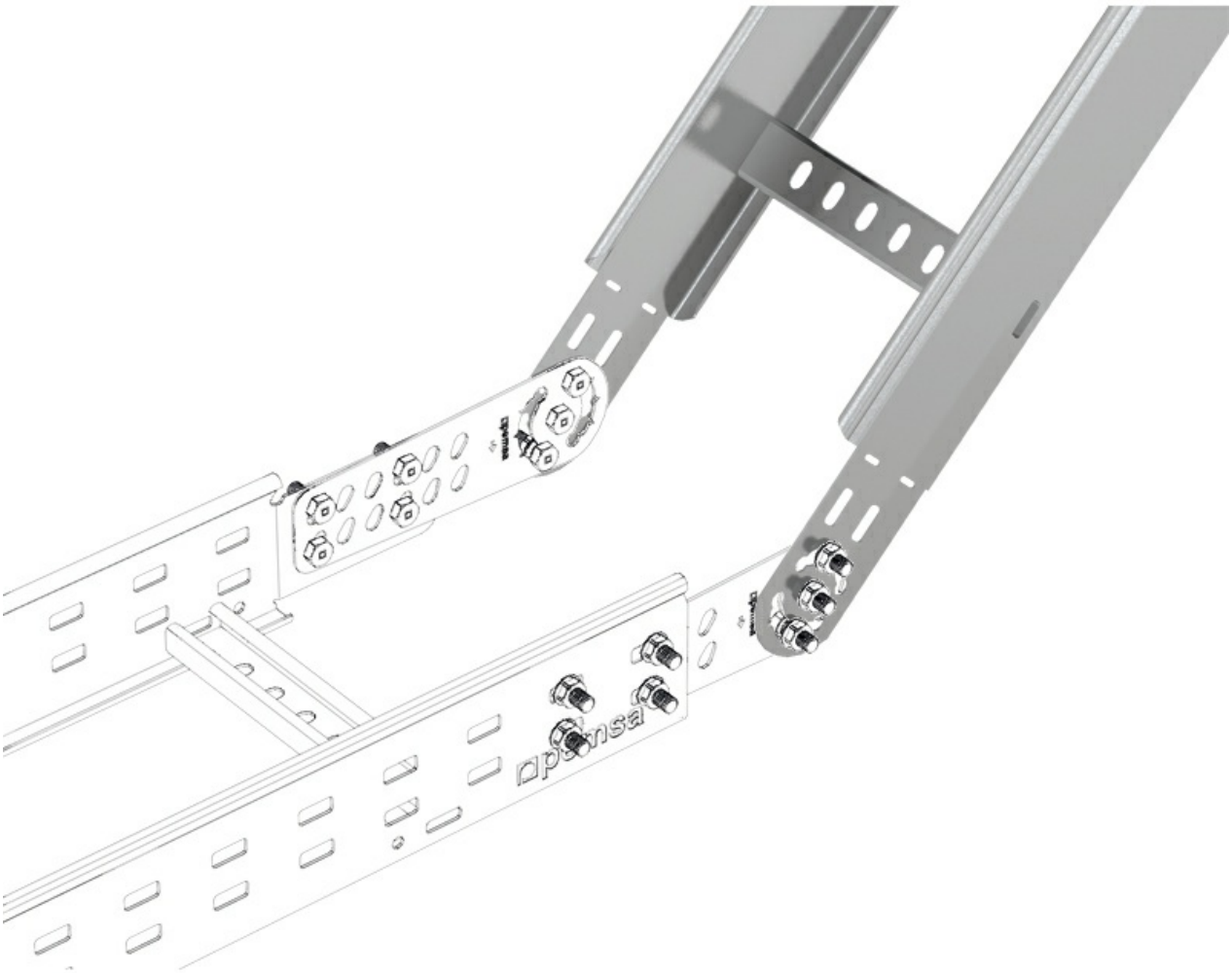

Any information included in this document is property of Pemsa®. It cannot be copied, total or partially, nor disclosed to third parties nor used without the explicit and written authorization by Pemsa®. These documents total or partially, can be subject to patent and/or be patent pending and therefore protected by intellectual and industrial property rights. Pemsa, Rejiband, Pemsaband, Inducanal, Rejitech, Megaband, Pemsaflex are registered trademarks property of "Pemsa Cable Management, S.A."

Articulates Riser Section MEGAband

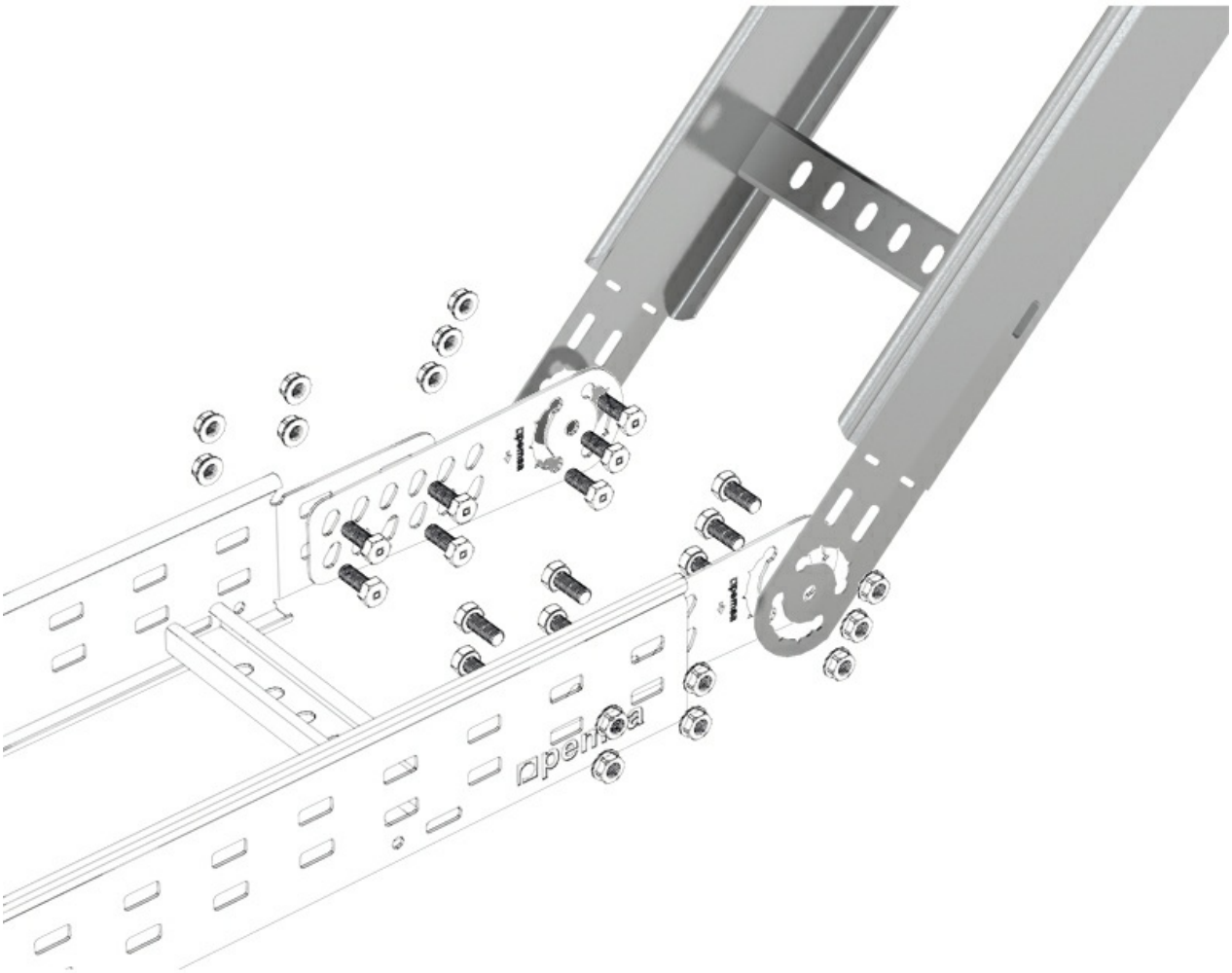

Any information included in this document is property of Pemsa®. It cannot be copied, total or partially, nor disclosed to third parties nor used without the explicit and written authorization by Pemsa®. These documents total or partially, can be subject to patent and/or be patent pending and therefore protected by intellectual and industrial property rights. Pemsa, Rejiband, Pemsaband, Inducanal, Rejitech, Megaband, Pemsaflex are registered trademarks property of "Pemsa Cable Management, S.A."