Metatray inside riser (Ref: 82003709)



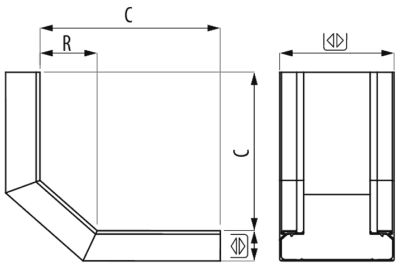

Description

Insulating inside rise of 90º for the management of cable for Metatray® cables trays and trunkings. Of 60 mm height, Width 100 mm. Manufactured in PVC-based Thermoplastic insulating material. Of 60 mm height, Width 400 mm. Grey RAL 7035 colour for the support, protection and conduction of cables.

Advantages

Excellent performance in corrosive environments, weather and exposure to UV radiation.

Protection grade IP4X or IP44 and Impact Grade 20 J (EN 61537) and IK10 (EN50085)

Insulating material, electrical safety and reduced maintenance costs.

Aenor N mark on product standards EN 61537 and EN 50085. CE compliance with directive 2014/35/EU.

Non-flame-propagating. Reaction to fire, V0 grade and M1 classification

Applications

Solutions

Any information included in this document is property of Pemsa®. It cannot be copied, total or partially, nor disclosed to third parties nor used without the explicit and written authorization by Pemsa®. These documents total or partially, can be subject to patent and/or be patent pending and therefore protected by intellectual and industrial property rights. Pemsa, Rejiband, Pemsaband, Inducanal, Rejitech, Megaband, Pemsaflex are registered trademarks property of "Pemsa Cable Management, S.A."

Metatray inside riser (Ref: 82003709)

Product data

ETIM 10	EC002400	**Material**	PVC
Huella de CO2. GWP A1-A3 (kg CO2 eq.)		**Working temperature range (°C)**	-20 / 60 °C
Colour	Grey RAL 7035	**Fire resistance**	GRADO UL94: V0
Flange (mm)	60	**UV Behaviour**	Resistant acc. to UL568
Width (mm)	400		
kg/u	2,231		
u	1		

Ⓢ Protection System

CU - Copper electroplated

PG - Pregalvanised

EZ - Electrogalvanised

BC - Electrogalvanised Bichromate

BK8 - High Resistance Coating

GC - Hot Dip Galvanising

INOX - Stainless Steel

PT - Polyester Paint

AL - Aluminum

LN - Brass or Nickel-plated brass

Ⓜ Insulating materials

PC+ABS - Halogen Free Polycarbonate + ABS

PVC - Polyvinyl Chloride

PP - Halogen Free Polypropylene

PA6 - Halogen Free Polyamide 6

PA12 - Halogen Free Polyamide 12

PU - Polyurethane

PE - Polyethylene

NBR - NBR rubber

PET - Thermoplastic Polyester

TPV - Thermoplastic

Any information included in this document is property of Pemsa®. It cannot be copied, total or partially, nor disclosed to third parties nor used without the explicit and written authorization by Pemsa®. These documents total or partially, can be subject to patent and/or be patent pending and therefore protected by intellectual and industrial property rights. Pemsa, Rejiband, Pemsaband, Inducanal, Rejitech, Megaband, Pemsaflex are registered trademarks property of "Pemsa Cable Management, S.A."

Metatray inside riser (Ref: 82003709)

Product applications



Any information included in this document is property of Pemsa®. It cannot be copied, total or partially, nor disclosed to third parties nor used without the explicit and written authorization by Pemsa®. These documents total or partially, can be subject to patent and/or be patent pending and therefore protected by intellectual and industrial property rights. Pemsa, Rejiband, Pemsaband, Inducanal, Rejitech, Megaband, Pemsaflex are registered trademarks property of "Pemsa Cable Management, S.A."

Metatray inside riser (Ref: 82003709)

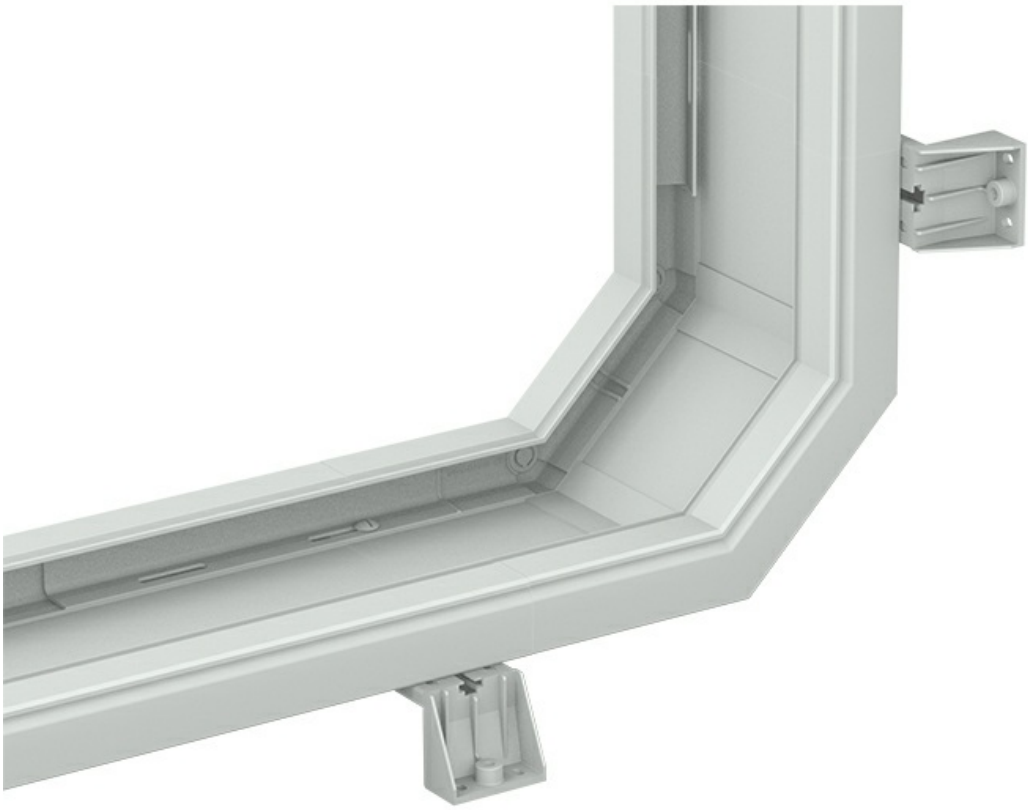

Any information included in this document is property of Pemsa®. It cannot be copied, total or partially, nor disclosed to third parties nor used without the explicit and written authorization by Pemsa®. These documents total or partially, can be subject to patent and/or be patent pending and therefore protected by intellectual and industrial property rights. Pemsa, Rejiband, Pemsaband, Inducanal, Rejitech, Megaband, Pemsaflex are registered trademarks property of "Pemsa Cable Management, S.A."