Cable Tray Accessories

Outside Riser Click (Ref: 70036440)



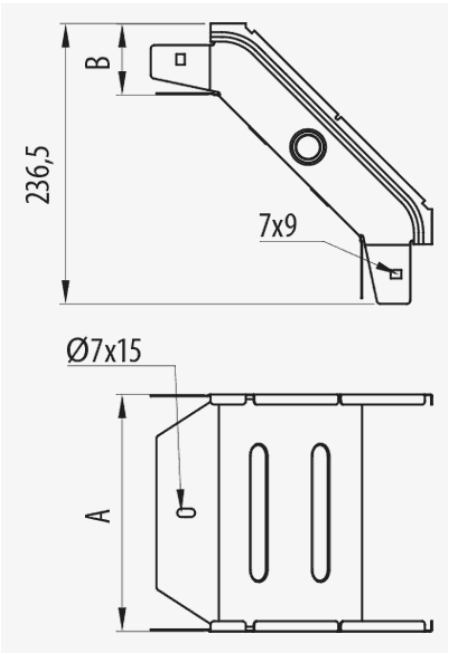

Description

Metal accessory for the creation of a 90° Outside Riser in the wiring installation of Pemsaband® and Inducanal® tray. Of 100 mm height, Width 400 mm, With GC protection system, HDG finish. It enables a change of height in a vertical direction and avoids any damage in the routing of the cables. Quick connection assembly using the Click system without couplers. Made of steel in various sizes and Protection Systems.

Advantages

Side flanges have the same profile as the straight section of the trays thus forming a continual view of the installation.

It has pre-formed holes in the sides to allow for the connection of fittings and conduits for the exit of cables.

Available in all sizes and protection systems: PG, GC and stainless steel AISI304 and AISI316.

The PG protection system is supplied flat for later assembly and provides savings on transportation and storage by reducing its volume.

Assembly by means of the quick-connect click system without the need for couplers. Patented Universal System that has holes compatible with the connection to other sheet metal tray.

Applications

Suitable for the creation of an Inside Riser in the Pemsaband® One perforated and solid ranges for the Support, management and distribution of Electrical and/or telecommunications cables in public buildings, infrastructures and civil works, tertiary sector and industrial applications.

Solutions

Any information included in this document is property of Pemsa®. It cannot be copied, total or partially, nor disclosed to third parties nor used without the explicit and written authorization by Pemsa®. These documents total or partially, can be subject to patent and/or be patent pending and therefore protected by intellectual and industrial property rights. Pemsa, Rejiband, Pemsaband, Inducanal, Rejitech, Megaband, Pemsaflex are registered trademarks property of "Pemsa Cable Management, S.A."

Outside Riser Click (Ref: 70036440)

Product data

ETIM 10	EC002400	**u**	1
Huella de CO2. GWP A1-A3 (kg CO2 eq.)		**Material**	Steel with surface coating
Protection System	GC	**Impact Strength (J)**	20 J
Finish	HDG, Hot Dip Galvanised	**IP**	IP44
Resistance Class	Class 5	**Working temperature range (°C)**	-50 / 150 °C
Flange (mm)	100	**Fire resistance**	A1 No combustible
Width (mm)	400		
R (mm)	100		
kg/u	0,873		

Ⓢ Protection System

CU - Copper electroplated

PG - Pregalvanised

EZ - Electrogalvanised

BC - Electrogalvanised Bichromate

BK8 - High Resistance Coating

GC - Hot Dip Galvanising

INOX - Stainless Steel

PT - Polyester Paint

AL - Aluminum

LN - Brass or Nickel-plated brass

Ⓜ Insulating materials

PC+ABS - Halogen Free Polycarbonate + ABS

PVC - Polyvinyl Chloride

PP - Halogen Free Polypropylene

PA6 - Halogen Free Polyamide 6

PA12 - Halogen Free Polyamide 12

PU - Polyurethane

PE - Polyethylene

NBR - NBR rubber

PET - Thermoplastic Polyester

TPV - Thermoplastic

Any information included in this document is property of Pemsa®. It cannot be copied, total or partially, nor disclosed to third parties nor used without the explicit and written authorization by Pemsa®. These documents total or partially, can be subject to patent and/or be patent pending and therefore protected by intellectual and industrial property rights. Pemsa, Rejiband, Pemsaband, Inducanal, Rejitech, Megaband, Pemsaflex are registered trademarks property of "Pemsa Cable Management, S.A."

Outside Riser Click (Ref: 70036440)

Product applications

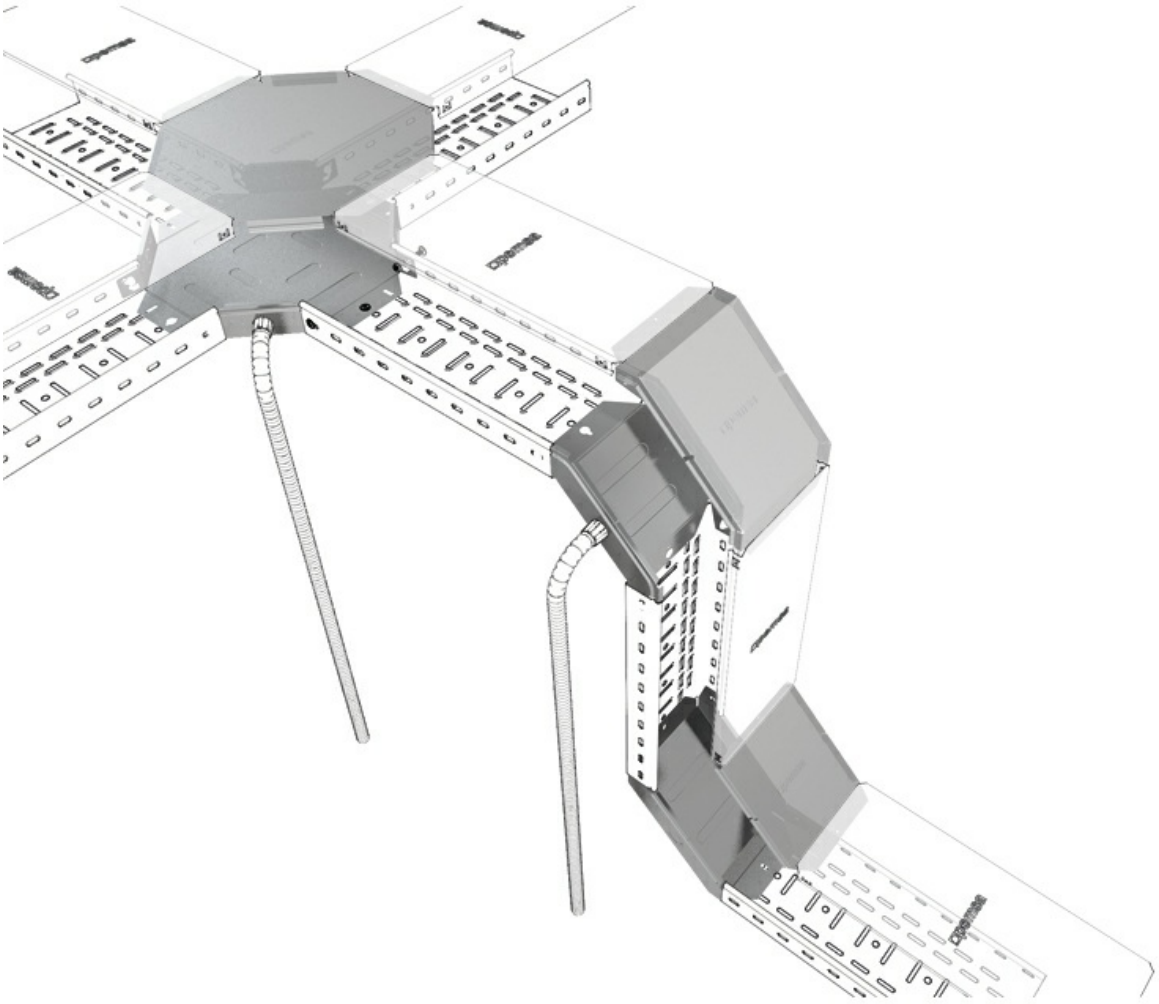

Any information included in this document is property of Pemsa®. It cannot be copied, total or partially, nor disclosed to third parties nor used without the explicit and written authorization by Pemsa®. These documents total or partially, can be subject to patent and/or be patent pending and therefore protected by intellectual and industrial property rights. Pemsa, Rejiband, Pemsaband, Inducanal, Rejitech, Megaband, Pemsaflex are registered trademarks property of "Pemsa Cable Management, S.A."

Outside Riser Click (Ref: 70036440)

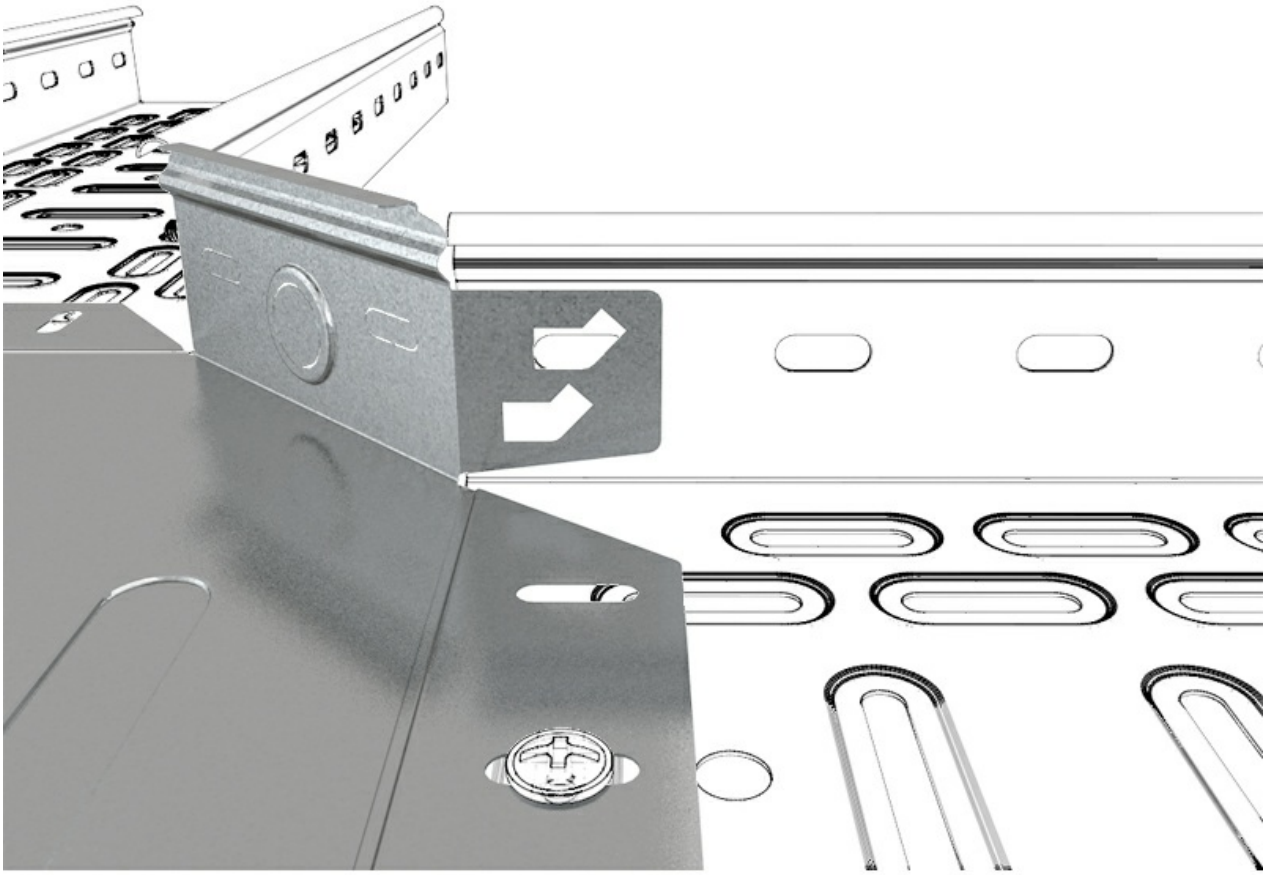

www.pemsa-rejiband.com

Any information included in this document is property of Pemsa®. It cannot be copied, total or partially, nor disclosed to third parties nor used without the explicit and written authorization by Pemsa®. These documents total or partially, can be subject to patent and/or be patent pending and therefore protected by intellectual and industrial property rights. Pemsa, Rejiband, Pemsaband, Inducanal, Rejitech, Megaband, Pemsaflex are registered trademarks property of "Pemsa Cable Management, S.A."

Outside Riser Click (Ref: 70036440)

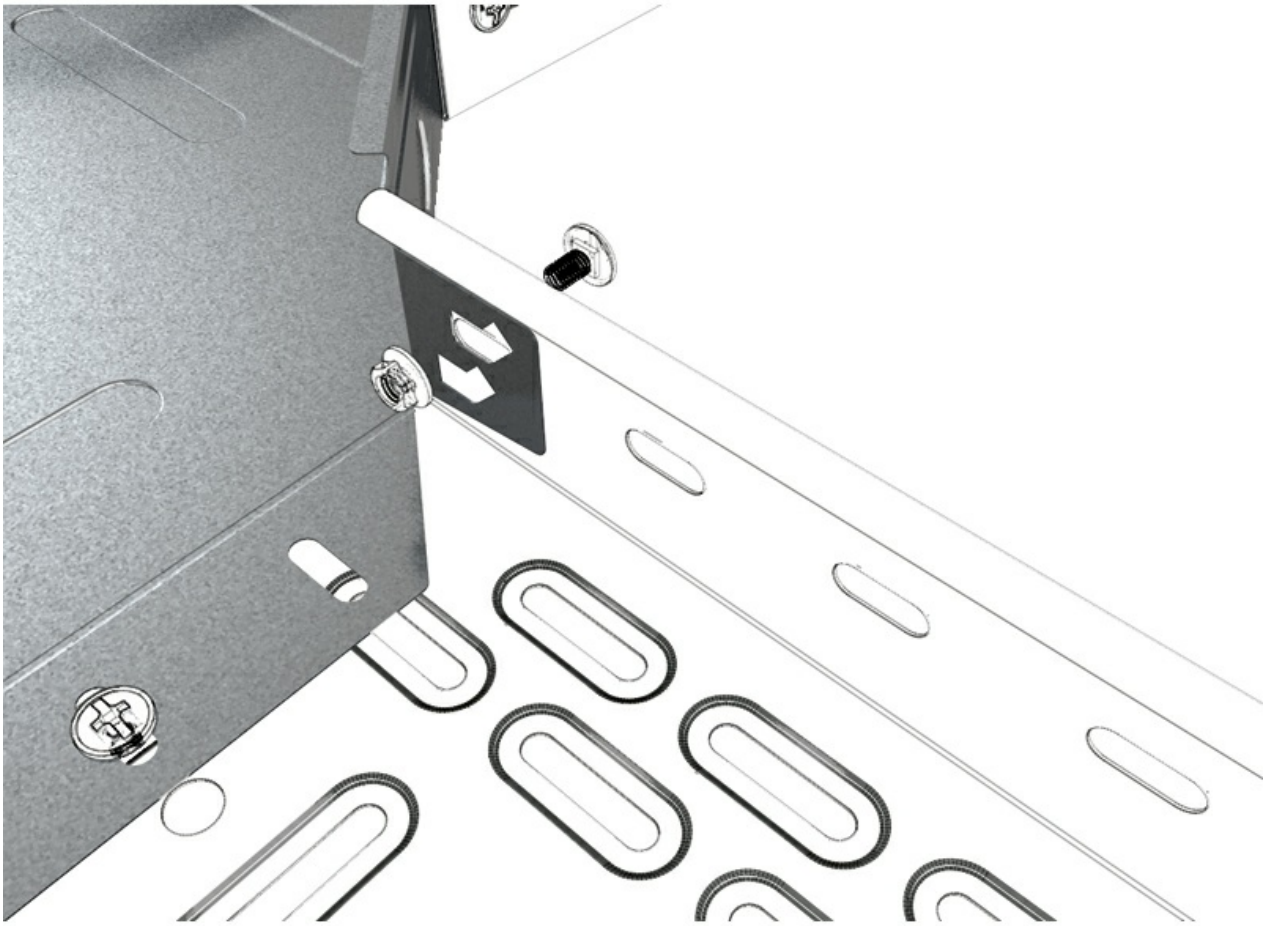

Any information included in this document is property of Pemsa®. It cannot be copied, total or partially, nor disclosed to third parties nor used without the explicit and written authorization by Pemsa®. These documents total or partially, can be subject to patent and/or be patent pending and therefore protected by intellectual and industrial property rights. Pemsa, Rejiband, Pemsaband, Inducanal, Rejitech, Megaband, Pemsaflex are registered trademarks property of "Pemsa Cable Management, S.A."