90° Bend MEGAband

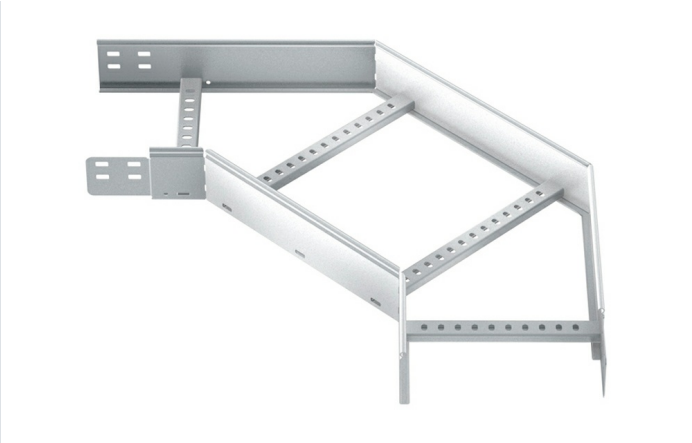

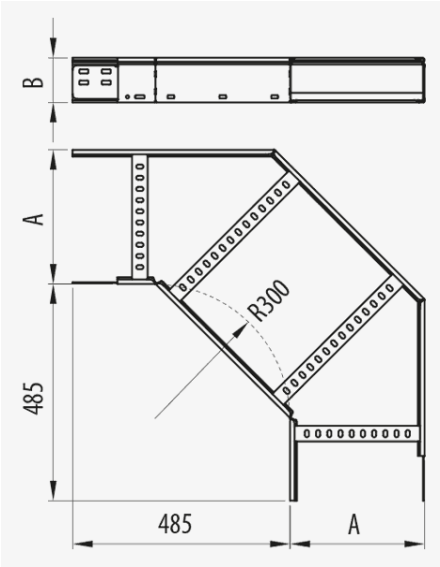

Description

Welded metal accessory with safety edge for horizontal curves of 90° angle in a Megaband® ladder installation. Assembly by click system of fast connection. Made of steel and available in different sizes and Protection Systems. Bending radius 300 mm. Check availability of 600 mm radius.

Advantages

Connection to ladder by rapid assembly Click system. Only the Megaband® M8 joint kit or M8 nuts and bolts required

Curved safety edge which offers maximum protection.

Notable savings in joints and installation time.

Electrical continuity guaranteed according to standard IEC61537.

Available in various protection systems: EZ, GC and stainless steel AISI 304 and AISI 316L.

Applications

Suitable for the creation of horizontal curves of 90° angle with Megaband® ladders in the conduction of cables in electrical and telecommunications installations in public buildings, infrastructures and civil works, industrial facilities, tertiary sector.

Solutions

Any information included in this document is property of Pemsa®. It cannot be copied, total or partially, nor disclosed to third parties nor used without the explicit and written authorization by Pemsa®. These documents total or partially, can be subject to patent and/or be patent pending and therefore protected by intellectual and industrial property rights. Pemsa, Rejiband, Pemsaband, Inducanal, Rejitech, Megaband, Pemsaflex are registered trademarks property of "Pemsa Cable Management, S.A."

90° Bend MEGAband

Main technical characteristics

60, 100, 120, 150 | 100, 150, 200, 300, 400, 450, 500, 600, 750, 900 | 300 | 90 | 1 | 20 J | -50 / 150 °C

A1 No combustible | ETIM 10 EC001535

Product data

PG	Class 3	60	100	93012100	2,030	Steel with surface coating
PG	Class 3	60	150	93012150	2,240	Steel with surface coating
PG	Class 3	60	200	93012200	2,450	Steel with surface coating
PG	Class 3	60	300	93012300	3,200	Steel with surface coating
PG	Class 3	60	400	93012400	3,700	Steel with surface coating
PG	Class 3	60	450	93012450	3,960	Steel with surface coating
PG	Class 3	60	500	93012500	4,190	Steel with surface coating
PG	Class 3	60	600	93012600	4,690	Steel with surface coating
PG	Class 3	100	100	93014100	2,871	Steel with surface coating
PG	Class 3	100	150	93014150	3,121	Steel with surface coating
PG	Class 3	100	200	93014200	3,371	Steel with surface coating
PG	Class 3	100	300	93014300	4,201	Steel with surface coating
PG	Class 3	100	400	93014400	4,771	Steel with surface coating
PG	Class 3	100	450	93014450	5,081	Steel with surface coating
PG	Class 3	100	500	93014500	5,351	Steel with surface coating
PG	Class 3	100	600	93014600	5,931	Steel with surface coating
PG	Class 3	100	750	93014750	7,051	Steel with surface coating
PG	Class 3	100	900	93014900	7,911	Steel with surface coating
PG	Class 3	120	100	93015100	3,301	Steel with surface coating
PG	Class 3	120	150	93015150	3,581	Steel with surface coating
PG	Class 3	120	200	93015200	3,841	Steel with surface coating
PG	Class 3	120	300	93015300	4,711	Steel with surface coating
PG	Class 3	120	400	93015400	5,321	Steel with surface coating
PG	Class 3	120	450	93015450	5,651	Steel with surface coating
PG	Class 3	120	500	93015500	5,941	Steel with surface coating
PG	Class 3	120	600	93015600	6,561	Steel with surface coating
PG	Class 3	120	750	93015750	7,741	Steel with surface coating
PG	Class 3	120	900	93015900	8,651	Steel with surface coating
PG	Class 3	150	100	93016100	3,951	Steel with surface coating
PG	Class 3	150	150	93016150	4,251	Steel with surface coating
PG	Class 3	150	200	93016200	4,551	Steel with surface coating
PG	Class 3	150	300	93016300	5,481	Steel with surface coating
PG	Class 3	150	400	93016400	6,151	Steel with surface coating
PG	Class 3	150	450	93016450	6,501	Steel with surface coating
PG	Class 3	150	500	93016500	6,821	Steel with surface coating

Any information included in this document is property of Pemsa®. It cannot be copied, total or partially, nor disclosed to third parties nor used without the explicit and written authorization by Pemsa®. These documents total or partially, can be subject to patent and/or be patent pending and therefore protected by intellectual and industrial property rights. Pemsa, Rejiband, Pemsaband, Inducanal, Rejitech, Megaband, Pemsaflex are registered trademarks property of "Pemsa Cable Management, S.A."

90° Bend MEGAband

S	IEC 61537			REF	kg/u	M
PG	Class 3	150	600	93016600	7,501	Steel with surface coating
PG	Class 3	150	750	93016750	8,771	Steel with surface coating
PG	Class 3	150	900	93016900	9,771	Steel with surface coating
GC	Class 6	60	100	93032100	2,150	Steel with surface coating
GC	Class 6	60	150	93032150	2,360	Steel with surface coating
GC	Class 6	60	200	93032200	2,590	Steel with surface coating
GC	Class 6	60	300	93032300	3,390	Steel with surface coating
GC	Class 6	60	400	93032400	3,920	Steel with surface coating
GC	Class 6	60	450	93032450	4,200	Steel with surface coating
GC	Class 6	60	500	93032500	4,450	Steel with surface coating
GC	Class 6	60	600	93032600	4,990	Steel with surface coating
GC	Class 6	100	100	93034100	3,051	Steel with surface coating
GC	Class 6	100	150	93034150	3,321	Steel with surface coating
GC	Class 6	100	200	93034200	3,581	Steel with surface coating
GC	Class 6	100	300	93034300	4,461	Steel with surface coating
GC	Class 6	100	400	93034400	5,081	Steel with surface coating
GC	Class 6	100	450	93034450	5,401	Steel with surface coating
GC	Class 6	100	500	93034500	5,691	Steel with surface coating
GC	Class 6	100	600	93034600	6,311	Steel with surface coating
GC	Class 6	100	750	93034750	7,511	Steel with surface coating
GC	Class 6	100	900	93034900	8,421	Steel with surface coating
GC	Class 6	120	100	93035100	3,511	Steel with surface coating
GC	Class 6	120	150	93035150	3,791	Steel with surface coating
GC	Class 6	120	200	93035200	4,081	Steel with surface coating
GC	Class 6	120	300	93035300	5,011	Steel with surface coating
GC	Class 6	120	400	93035400	5,661	Steel with surface coating
GC	Class 6	120	450	93035450	6,011	Steel with surface coating
GC	Class 6	120	500	93035500	7,631	Steel with surface coating
GC	Class 6	120	600	93035600	8,371	Steel with surface coating
GC	Class 6	120	750	93035750	9,771	Steel with surface coating
GC	Class 6	120	900	93035900	10,901	Steel with surface coating
GC	Class 6	150	100	93036100	4,211	Steel with surface coating
GC	Class 6	150	150	93036150	4,521	Steel with surface coating
GC	Class 6	150	200	93036200	4,841	Steel with surface coating
GC	Class 6	150	300	93036300	5,821	Steel with surface coating
GC	Class 6	150	400	93036400	6,541	Steel with surface coating
GC	Class 6	150	450	93036450	6,921	Steel with surface coating
GC	Class 6	150	500	93036500	8,871	Steel with surface coating
GC	Class 6	150	600	93036600	9,691	Steel with surface coating
GC	Class 6	150	750	93036750	11,201	Steel with surface coating
GC	Class 6	150	900	93036900	12,501	Steel with surface coating

Any information included in this document is property of Pemsa®. It cannot be copied, total or partially, nor disclosed to third parties nor used without the explicit and written authorization by Pemsa®. These documents total or partially, can be subject to patent and/or be patent pending and therefore protected by intellectual and industrial property rights. Pemsa, Rejiband, Pemsaband, Inducanal, Rejitech, Megaband, Pemsaflex are registered trademarks property of "Pemsa Cable Management, S.A."

90° Bend MEGAband

S	IEC 61537			REF	kg/u	M
INOX	Class 9C	60	100	93052100	2,010	Stainless steel AISI 304
INOX	Class 9C	60	150	93052150	2,220	Stainless steel AISI 304
INOX	Class 9C	60	200	93052200	2,420	Stainless steel AISI 304
INOX	Class 9C	60	300	93052300	3,170	Stainless steel AISI 304
INOX	Class 9C	60	400	93052400	3,670	Stainless steel AISI 304
INOX	Class 9C	60	450	93052450	3,930	Stainless steel AISI 304
INOX	Class 9C	60	500	93052500	4,170	Stainless steel AISI 304
INOX	Class 9C	60	600	93052600	4,670	Stainless steel AISI 304
INOX	Class 9C	100	100	93054100	2,851	Stainless steel AISI 304
INOX	Class 9C	100	150	93054150	3,111	Stainless steel AISI 304
INOX	Class 9C	100	200	93054200	3,351	Stainless steel AISI 304
INOX	Class 9C	100	300	93054300	4,171	Stainless steel AISI 304
INOX	Class 9C	100	400	93054400	4,751	Stainless steel AISI 304
INOX	Class 9C	100	450	93054450	5,051	Stainless steel AISI 304
INOX	Class 9C	100	500	93054500	5,331	Stainless steel AISI 304
INOX	Class 9C	100	600	93054600	5,911	Stainless steel AISI 304
INOX	Class 9C	100	750	93054750	7,031	Stainless steel AISI 304
INOX	Class 9C	100	900	93054900	7,881	Stainless steel AISI 304
INOX	Class 9C	120	100	93055100	3,291	Stainless steel AISI 304
INOX	Class 9C	120	150	93055150	3,561	Stainless steel AISI 304
INOX	Class 9C	120	200	93055200	3,821	Stainless steel AISI 304
INOX	Class 9C	120	300	93055300	4,681	Stainless steel AISI 304
INOX	Class 9C	120	400	93055400	5,301	Stainless steel AISI 304
INOX	Class 9C	120	450	93055450	5,621	Stainless steel AISI 304
INOX	Class 9C	120	500	93055500	5,911	Stainless steel AISI 304
INOX	Class 9C	120	600	93055600	6,531	Stainless steel AISI 304
INOX	Class 9C	120	750	93055750	7,721	Stainless steel AISI 304
INOX	Class 9C	120	900	93055900	8,631	Stainless steel AISI 304
INOX	Class 9C	150	100	93056100	3,941	Stainless steel AISI 304
INOX	Class 9C	150	150	93056150	4,241	Stainless steel AISI 304
INOX	Class 9C	150	200	93056200	4,531	Stainless steel AISI 304
INOX	Class 9C	150	300	93056300	5,451	Stainless steel AISI 304
INOX	Class 9C	150	400	93056400	6,121	Stainless steel AISI 304
INOX	Class 9C	150	450	93056450	6,481	Stainless steel AISI 304
INOX	Class 9C	150	500	93056500	6,801	Stainless steel AISI 304
INOX	Class 9C	150	600	93056600	7,481	Stainless steel AISI 304
INOX	Class 9C	150	750	93056750	8,751	Stainless steel AISI 304
INOX	Class 9C	150	900	93056900	9,751	Stainless steel AISI 304
INOX	Class 9D	60	100	93062100	2,010	Acero inoxidable AISI 316L
INOX	Class 9D	60	150	93062150	2,220	Acero inoxidable AISI 316L
INOX	Class 9D	60	200	93062200	2,420	Acero inoxidable AISI 316L

Any information included in this document is property of Pemsa®. It cannot be copied, total or partially, nor disclosed to third parties nor used without the explicit and written authorization by Pemsa®. These documents total or partially, can be subject to patent and/or be patent pending and therefore protected by intellectual and industrial property rights. Pemsa, Rejiband, Pemsaband, Inducanal, Rejitech, Megaband, Pemsaflex are registered trademarks property of "Pemsa Cable Management, S.A."

90° Bend MEGAband

Ⓢ	IEC 61537			REF	kg/u	Ⓜ
INOX	Class 9D	60	300	93062300	3,170	Acero inoxidable AISI 316L
INOX	Class 9D	60	400	93062400	3,670	Acero inoxidable AISI 316L
INOX	Class 9D	60	450	93062450	3,930	Acero inoxidable AISI 316L
INOX	Class 9D	60	500	93062500	4,170	Acero inoxidable AISI 316L
INOX	Class 9D	60	600	93062600	4,670	Acero inoxidable AISI 316L
INOX	Class 9D	100	100	93064100	2,851	Acero inoxidable AISI 316L
INOX	Class 9D	100	150	93064150	3,111	Acero inoxidable AISI 316L
INOX	Class 9D	100	200	93064200	3,351	Acero inoxidable AISI 316L
INOX	Class 9D	100	300	93064300	4,171	Acero inoxidable AISI 316L
INOX	Class 9D	100	400	93064400	4,751	Acero inoxidable AISI 316L
INOX	Class 9D	100	450	93064450	5,051	Acero inoxidable AISI 316L
INOX	Class 9D	100	500	93064500	5,331	Acero inoxidable AISI 316L
INOX	Class 9D	100	600	93064600	5,911	Acero inoxidable AISI 316L
INOX	Class 9D	100	750	93064750	7,031	Acero inoxidable AISI 316L
INOX	Class 9D	100	900	93064900	7,881	Acero inoxidable AISI 316L
INOX	Class 9D	120	100	93065100	3,291	Acero inoxidable AISI 316L
INOX	Class 9D	120	150	93065150	3,561	Acero inoxidable AISI 316L
INOX	Class 9D	120	200	93065200	3,821	Acero inoxidable AISI 316L
INOX	Class 9D	120	300	93065300	4,681	Acero inoxidable AISI 316L
INOX	Class 9D	120	400	93065400	5,301	Acero inoxidable AISI 316L
INOX	Class 9D	120	450	93065450	5,621	Acero inoxidable AISI 316L
INOX	Class 9D	120	500	93065500	5,911	Acero inoxidable AISI 316L
INOX	Class 9D	120	600	93065600	6,531	Acero inoxidable AISI 316L
INOX	Class 9D	120	750	93065750	7,721	Acero inoxidable AISI 316L
INOX	Class 9D	120	900	93065900	8,631	Acero inoxidable AISI 316L
INOX	Class 9D	150	100	93066100	3,941	Acero inoxidable AISI 316L
INOX	Class 9D	150	150	93066150	4,241	Acero inoxidable AISI 316L
INOX	Class 9D	150	200	93066200	4,531	Acero inoxidable AISI 316L
INOX	Class 9D	150	300	93066300	5,451	Acero inoxidable AISI 316L
INOX	Class 9D	150	400	93066400	6,121	Acero inoxidable AISI 316L
INOX	Class 9D	150	450	93066450	6,481	Acero inoxidable AISI 316L
INOX	Class 9D	150	500	93066500	6,801	Acero inoxidable AISI 316L
INOX	Class 9D	150	600	93066600	7,481	Acero inoxidable AISI 316L
INOX	Class 9D	150	750	93066750	8,751	Acero inoxidable AISI 316L
INOX	Class 9D	150	900	93066900	9,751	Acero inoxidable AISI 316L

Ⓢ Protection System

CU - Copper electroplated

PG - Pregalvanised

EZ - Electrogalvanised

BC - Electrogalvanised Bichromate

BK8 - High Resistance Coating

Any information included in this document is property of Pemsa®. It cannot be copied, total or partially, nor disclosed to third parties nor used without the explicit and written authorization by Pemsa®. These documents total or partially, can be subject to patent and/or be patent pending and therefore protected by intellectual and industrial property rights. Pemsa, Rejiband, Pemsaband, Inducanal, Rejitech, Megaband, Pemsaflex are registered trademarks property of "Pemsa Cable Management, S.A."

GC - Hot Dip Galvanising

INOX - Stainless Steel

PT - Polyester Paint

AL - Aluminum

LN - Brass or Nickel-plated brass

Insulating materials

PC+ABS - Halogen Free Polycarbonate + ABS

PVC - Polyvinyl Chloride

PP - Halogen Free Polypropylene

PA6 - Halogen Free Polyamide 6

PA12 - Halogen Free Polyamide 12

PU - Polyurethane

PE - Polyethylene

NBR - NBR rubber

PET - Thermoplastic Polyester

TPV - Thermoplastic

Any information included in this document is property of Pemsa®. It cannot be copied, total or partially, nor disclosed to third parties nor used without the explicit and written authorization by Pemsa®. These documents total or partially, can be subject to patent and/or be patent pending and therefore protected by intellectual and industrial property rights. Pemsa, Rejiband, Pemsaband, Inducanal, Rejitech, Megaband, Pemsaflex are registered trademarks property of "Pemsa Cable Management, S.A."

90° Bend MEGAband

Product applications

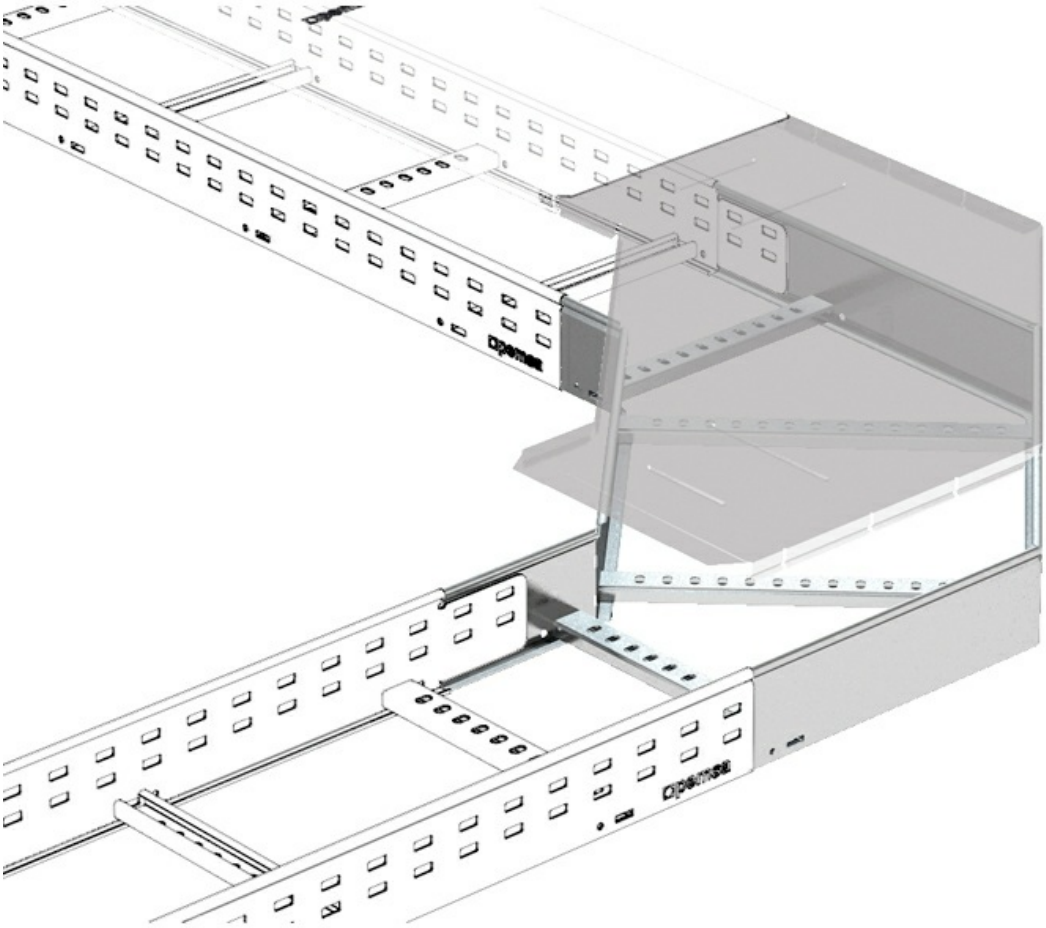

Any information included in this document is property of Pemsa®. It cannot be copied, total or partially, nor disclosed to third parties nor used without the explicit and written authorization by Pemsa®. These documents total or partially, can be subject to patent and/or be patent pending and therefore protected by intellectual and industrial property rights. Pemsa, Rejiband, Pemsaband, Inducanal, Rejitech, Megaband, Pemsaflex are registered trademarks property of "Pemsa Cable Management, S.A."

90° Bend MEGAband

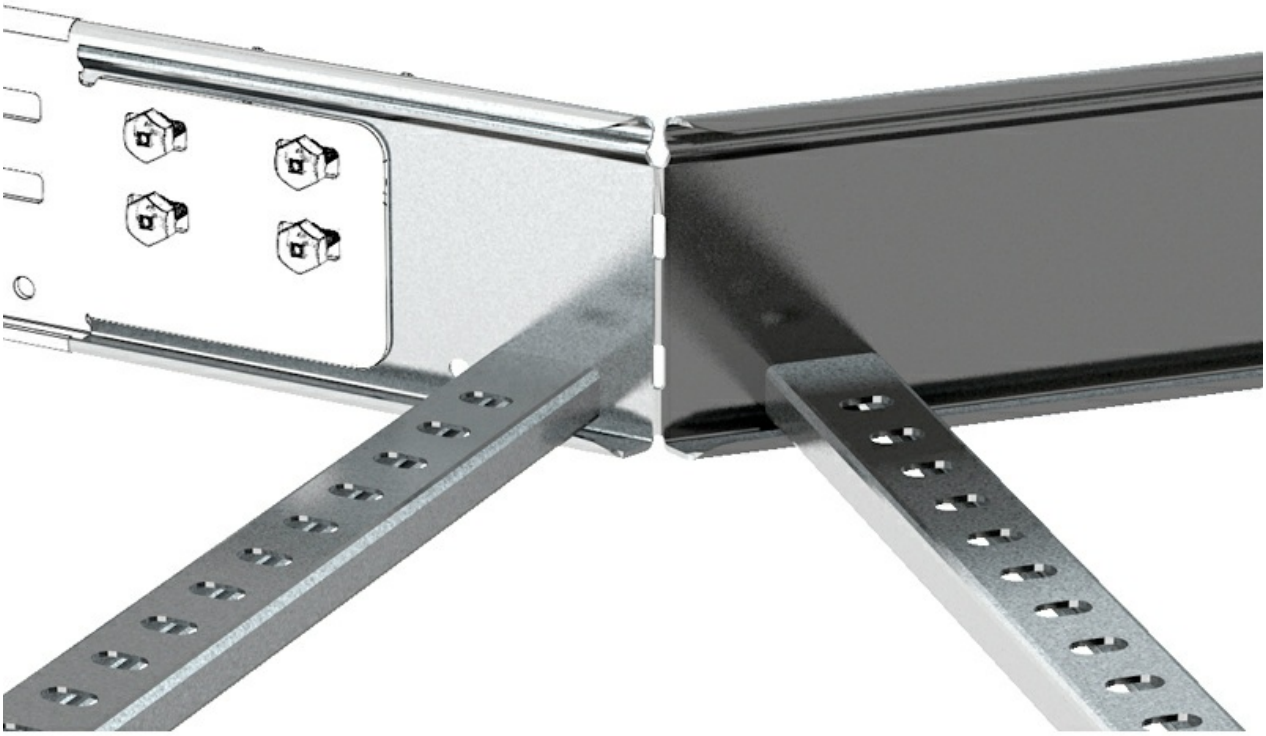

Any information included in this document is property of Pemsa®. It cannot be copied, total or partially, nor disclosed to third parties nor used without the explicit and written authorization by Pemsa®. These documents total or partially, can be subject to patent and/or be patent pending and therefore protected by intellectual and industrial property rights. Pemsa, Rejiband, Pemsaband, Inducanal, Rejitech, Megaband, Pemsaflex are registered trademarks property of "Pemsa Cable Management, S.A."

90° Bend MEGAband

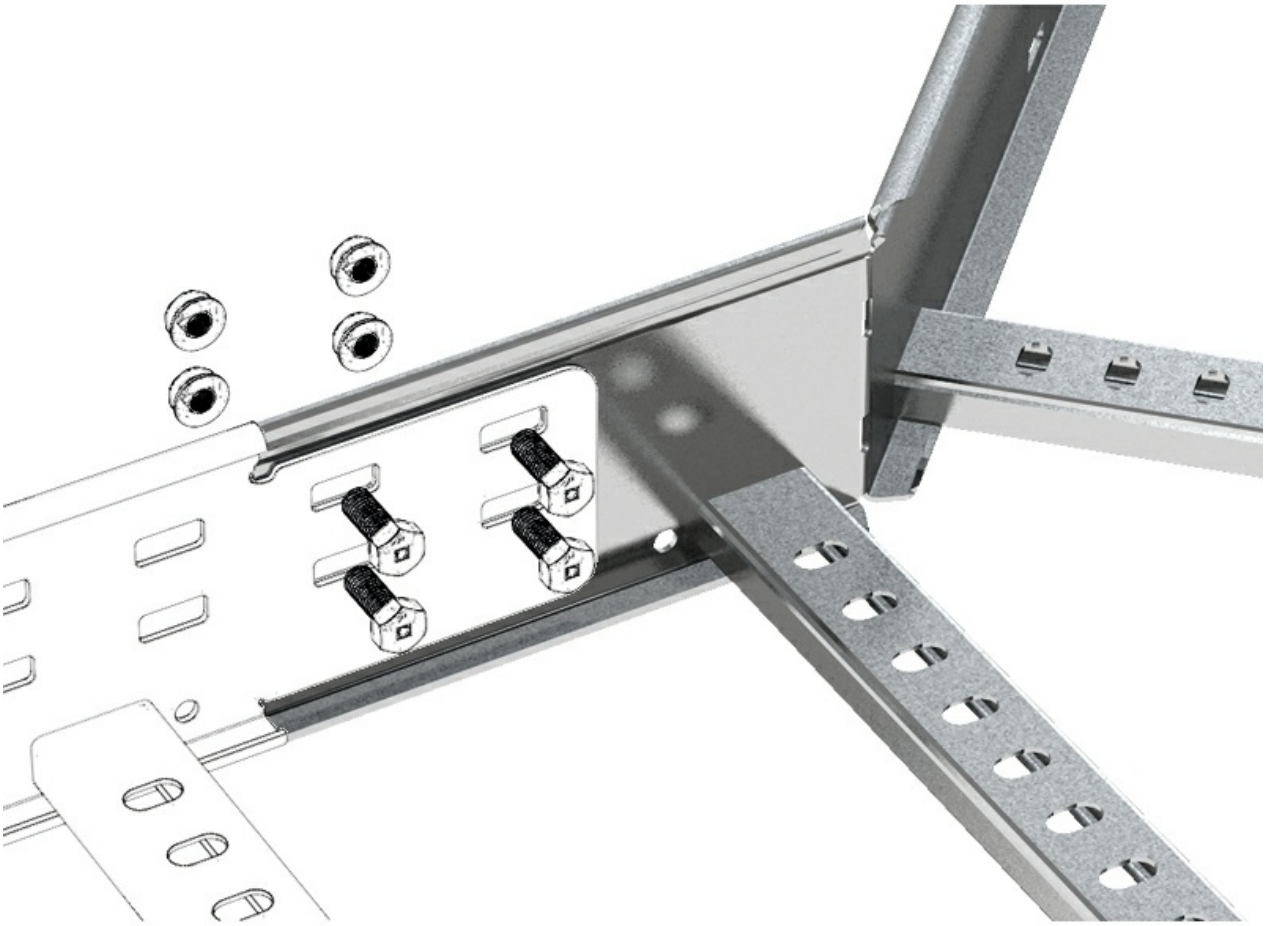

Any information included in this document is property of Pemsa®. It cannot be copied, total or partially, nor disclosed to third parties nor used without the explicit and written authorization by Pemsa®. These documents total or partially, can be subject to patent and/or be patent pending and therefore protected by intellectual and industrial property rights. Pemsa, Rejiband, Pemsaband, Inducanal, Rejitech, Megaband, Pemsaflex are registered trademarks property of "Pemsa Cable Management, S.A."

90° Bend MEGAband

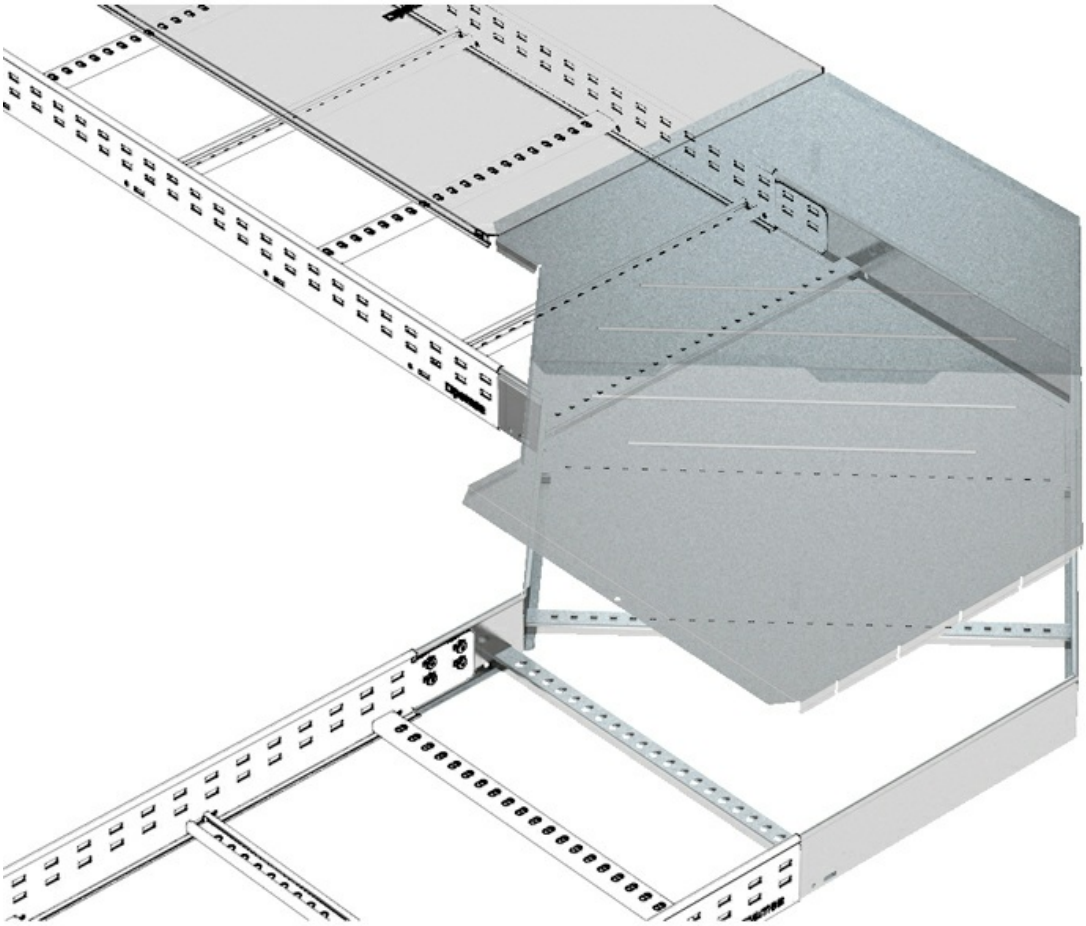

Any information included in this document is property of Pemsa®. It cannot be copied, total or partially, nor disclosed to third parties nor used without the explicit and written authorization by Pemsa®. These documents total or partially, can be subject to patent and/or be patent pending and therefore protected by intellectual and industrial property rights. Pemsa, Rejiband, Pemsaband, Inducanal, Rejitech, Megaband, Pemsaflex are registered trademarks property of "Pemsa Cable Management, S.A."

90° Bend MEGAband

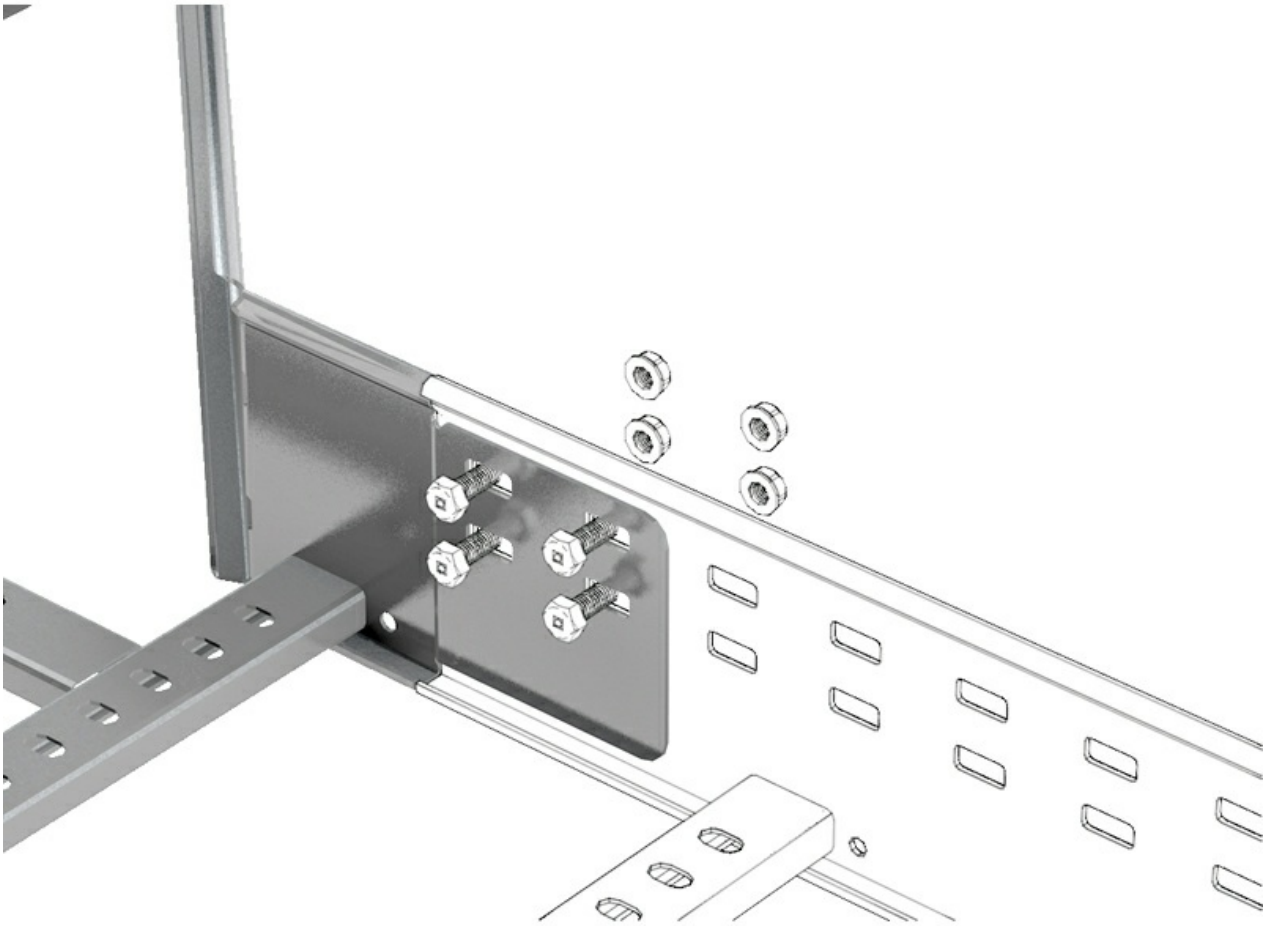

Any information included in this document is property of Pemsa®. It cannot be copied, total or partially, nor disclosed to third parties nor used without the explicit and written authorization by Pemsa®. These documents total or partially, can be subject to patent and/or be patent pending and therefore protected by intellectual and industrial property rights. Pemsa, Rejiband, Pemsaband, Inducanal, Rejitech, Megaband, Pemsaflex are registered trademarks property of "Pemsa Cable Management, S.A."