Cable Tray Accessories

Universal Corner

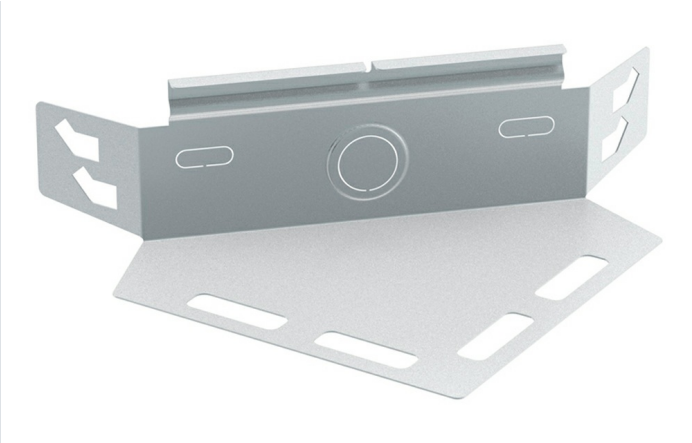

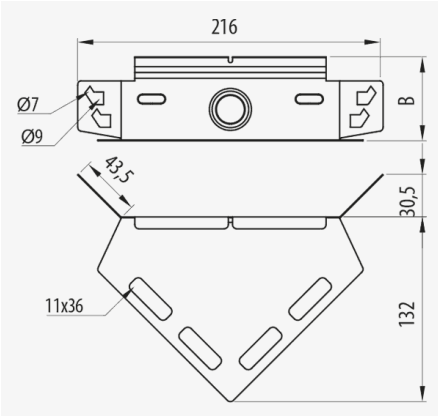

Description

Universal metal corner for Pemsaband® and Inducanal® trays that allow the creation of different accessories, bends, tees, reducers, etc. Quick connection assembly using the Click system without couplers. Made of steel in various sizes and Protection Systems.

Advantages

The PG protection system is supplied flat for later assembly and provides savings on transportation and storage by reducing its volume.

Assembly by means of the quick-connect click system without the need for couplers.

Its geometry is adapted to avoid any damage to the cables when making a joint with the rest of the trays.

Available in all sizes and protection systems: PG, GC and stainless steel AISI304 and AISI316.

Applications

Suitable for making various aaccessories in Pemsaband® One perforated and solid tray systems in the Support, management and distribution of Electrical and/or telecommunications cables in public buildings, infrastructures and civil works, tertiary sector and industrial applications.

Solutions

Any information included in this document is property of Pemsa®. It cannot be copied, total or partially, nor disclosed to third parties nor used without the explicit and written authorization by Pemsa®. These documents total or partially, can be subject to patent and/or be patent pending and therefore protected by intellectual and industrial property rights. Pemsa, Rejiband, Pemsaband, Inducanal, Rejitech, Megaband, Pemsaflex are registered trademarks property of "Pemsa Cable Management, S.A."

Universal Corner

Main technical characteristics

35, 60, 100	1	-50 / 150 °C	A1 No combustible	ETIM EC002400

Product data

Ⓢ	Class IEC 61537		REF	kg/u	Ⓜ
PG	Class 3	35	70021100	0.119	Steel with surface coating
PG	Class 3	60	70021200	0.142	Steel with surface coating
PG	Class 3	100	70021400	0.174	Steel with surface coating
GC	Class 5	35	70031100	0.115	Steel with surface coating
GC	Class 5	60	70031200	0.156	Steel with surface coating
GC	Class 5	100	70031400	0.191	Steel with surface coating
INOX	Class 9C	60	70051200	0.099	Stainless steel AISI 304
INOX	Class 9D	60	70061200	0.099	Acero inoxidable AISI 316L
AZ+	Class 8	60	82003790	0.166	Steel with surface coating

Ⓢ Protection System

CU - Copper electroplated

PG - Pregalvanised

EZ - Electrogalvanised

BC - Electrogalvanised Bichromate

BK8 - High Resistance Coating

GC - Hot Dip Galvanising

INOX - Stainless Steel

PT - Polyester Paint

AL - Aluminum

LN - Brass or Nickel-plated brass

Ⓜ Insulating materials

PC+ABS - Halogen Free Polycarbonate + ABS

PVC - Polyvinyl Chloride

PP - Halogen Free Polypropylene

PA6 - Halogen Free Polyamide 6

PA12 - Halogen Free Polyamide 12

PU - Polyurethane

PE - Polyethylene

NBR - NBR rubber

PET - Thermoplastic Polyester

TPV - Thermoplastic

Any information included in this document is property of Pemsa®. It cannot be copied, total or partially, nor disclosed to third parties nor used without the explicit and written authorization by Pemsa®. These documents total or partially, can be subject to patent and/or be patent pending and therefore protected by intellectual and industrial property rights. Pemsa, Rejiband, Pemsaband, Inducanal, Rejitech, Megaband, Pemsaflex are registered trademarks property of "Pemsa Cable Management, S.A."

Universal Corner

Product applications

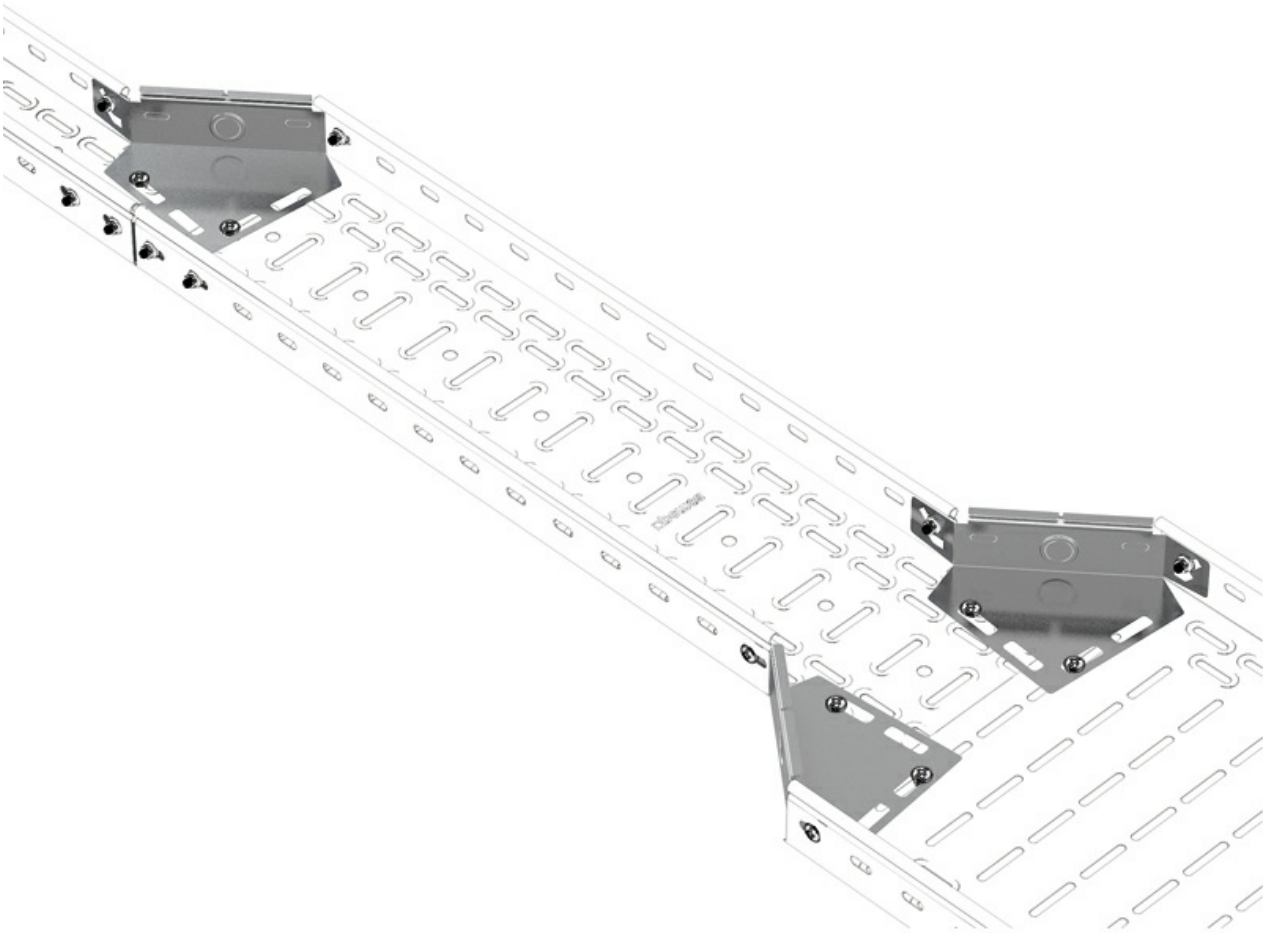

Any information included in this document is property of Pemsa®. It cannot be copied, total or partially, nor disclosed to third parties nor used without the explicit and written authorization by Pemsa®. These documents total or partially, can be subject to patent and/or be patent pending and therefore protected by intellectual and industrial property rights. Pemsa, Rejiband, Pemsaband, Inducanal, Rejitech, Megaband, Pemsaflex are registered trademarks property of "Pemsa Cable Management, S.A."

Universal Corner

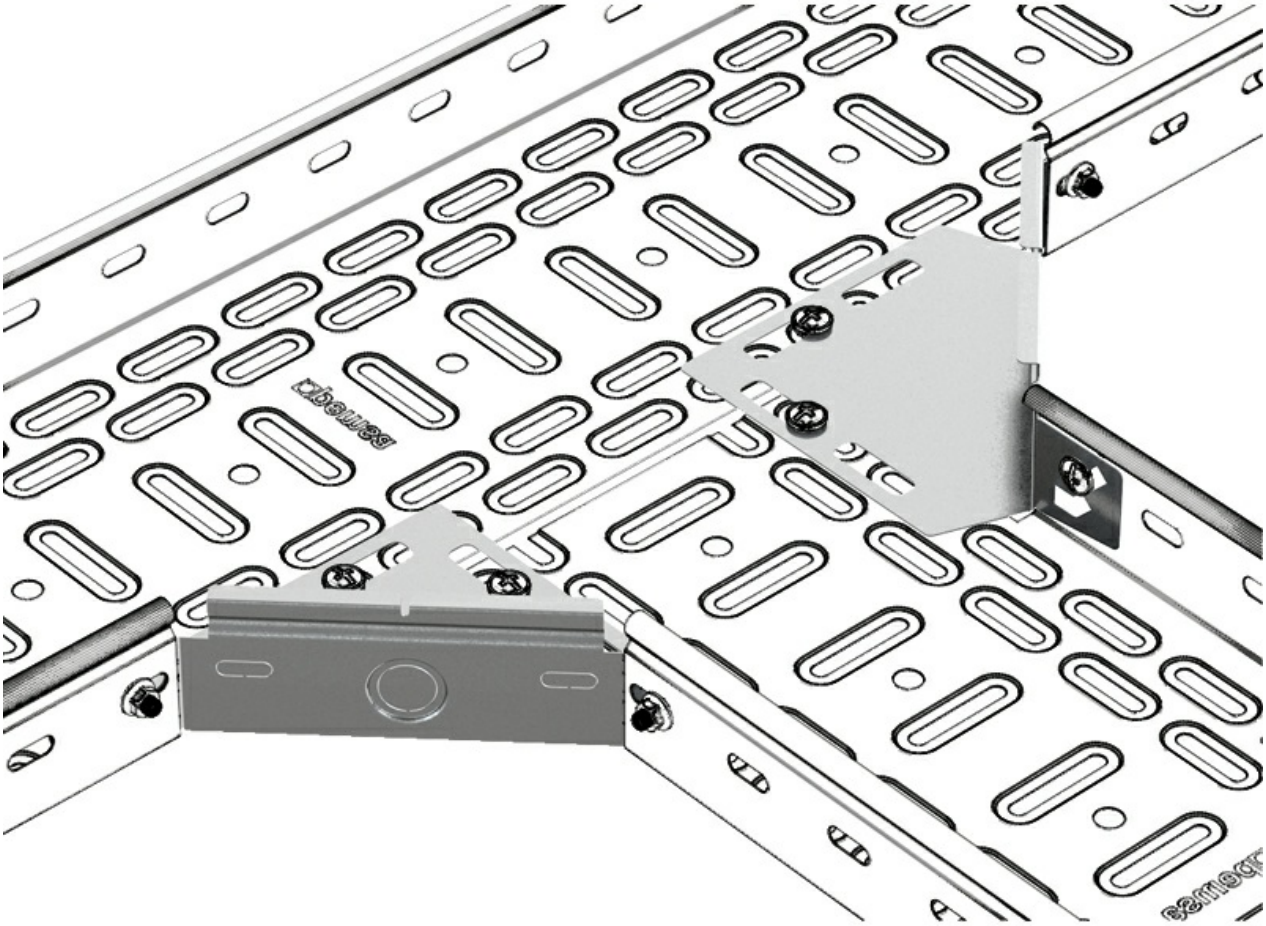

Any information included in this document is property of Pemsa®. It cannot be copied, total or partially, nor disclosed to third parties nor used without the explicit and written authorization by Pemsa®. These documents total or partially, can be subject to patent and/or be patent pending and therefore protected by intellectual and industrial property rights. Pemsa, Rejiband, Pemsaband, Inducanal, Rejitech, Megaband, Pemsaflex are registered trademarks property of "Pemsa Cable Management, S.A."

Universal Corner

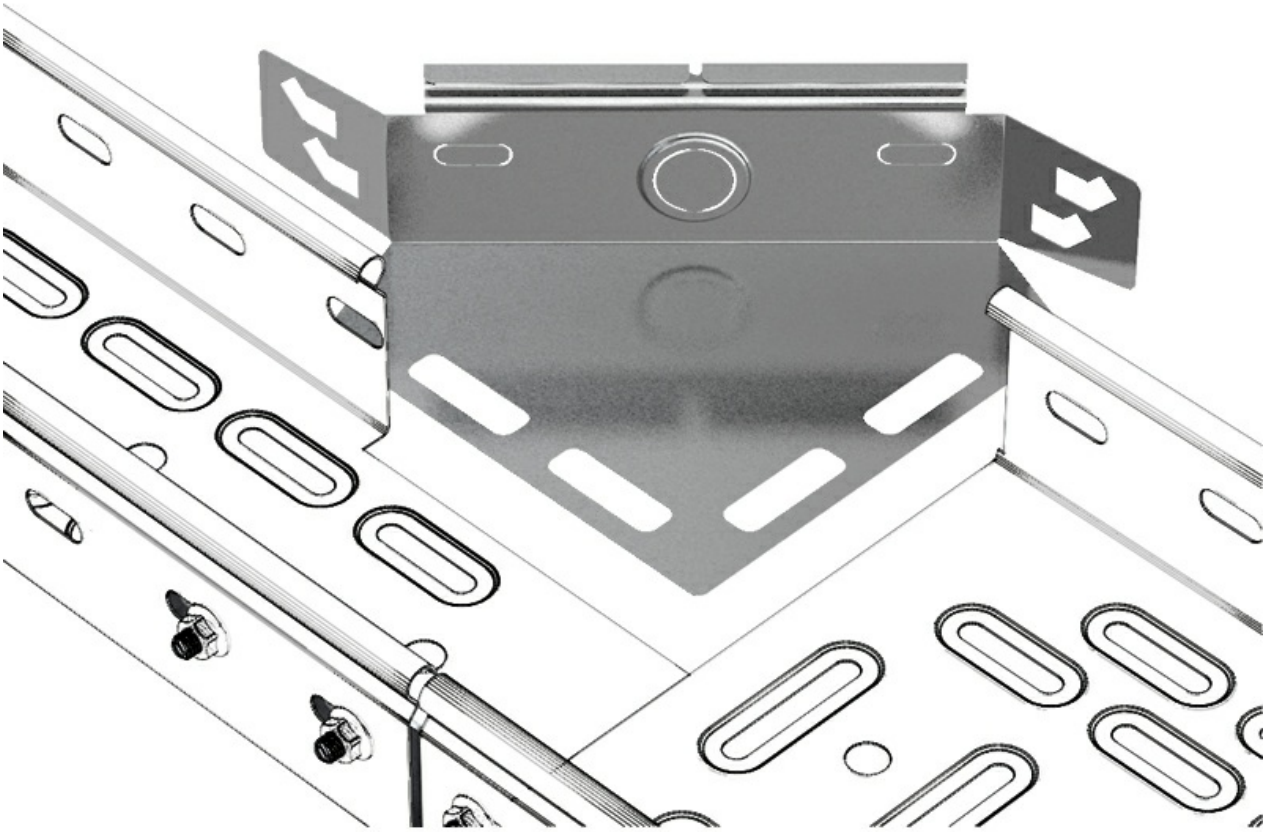

Any information included in this document is property of Pemsa®. It cannot be copied, total or partially, nor disclosed to third parties nor used without the explicit and written authorization by Pemsa®. These documents total or partially, can be subject to patent and/or be patent pending and therefore protected by intellectual and industrial property rights. Pemsa, Rejiband, Pemsaband, Inducanal, Rejitech, Megaband, Pemsaflex are registered trademarks property of "Pemsa Cable Management, S.A."