Part Clamp

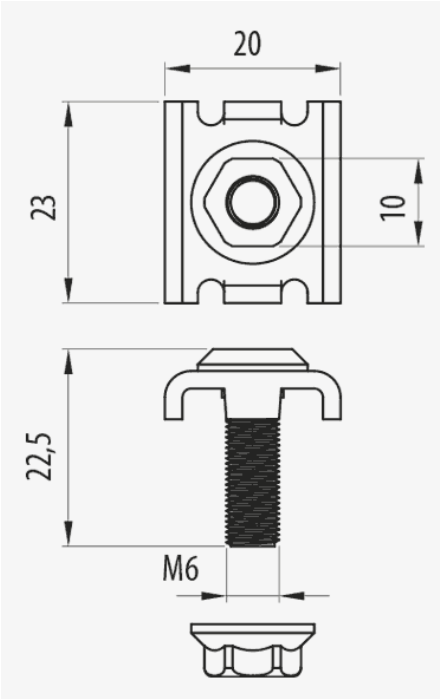

Description

Metal fixing for the attachment of supports or other accessories to Rejiband wire mesh trays. It consists of a 20 mm wide plate with a captive M6 screw and nut and is suitable for connection to trays of 35, 60 and 100 mm in height and all widths. Made of steel and available in various Protection Systems.

Advantages

Quick installation thanks to the captive screw.

Large saving in time and cost of the installation.

Precise adjustment and maximum resistance.

E90 fire resistance (90 minutes, 1000°C) according to DIN 4102-12.

Available in various protection systems: EZ, BC, GC or high resistance BK8, depending on the type of application.

Applications

Suitable for all Rejiband tray connections and accessories. It facilitates the installation of Rejiband wire mesh trays in cable management installations.

Solutions

INDUSTRIA ALIMENTARIA

Any information included in this document is property of Pemsa®. It cannot be copied, total or partially, nor disclosed to third parties nor used without the explicit and written authorization by Pemsa®. These documents total or partially, can be subject to patent and/or be patent pending and therefore protected by intellectual and industrial property rights. Pemsa, Rejiband, Pemsaband, Inducanal, Rejitech, Megaband, Pemsaflex are registered trademarks property of "Pemsa Cable Management, S.A."

Part Clamp

Main technical characteristics

M 6	50	-50 / 150 °C	ETIM EC002413

Product data

Ⓢ	Class IEC 61537		REF	kg/u	Ⓜ	
EZ	Class 3	20	64010060	0.019	Steel with surface coating	E90 (90 min. 1000°C)
BC	Class 5	20	64020060	0.019	Steel with surface coating	E90 (90 min. 1000°C)
GC	Class 8	20	64030060	0.019	Steel with surface coating	E90 (90 min. 1000°C)
GC	Class 8	30	64030160	0.021	Steel with surface coating	E90 (90 min. 1000°C)
INOX	Class 9D	20	64060060	0.019	Acero inoxidable AISI 316L	E90 (90 min. 1000°C)
BK8	Class 8	20	64080060	0.019	Steel with surface coating	E90 (90 min. 1000°C)
CU	Class 1	20	82003255	0.019	Steel with surface coating	A1 No combustible

Ⓢ Protection System

CU - Copper electroplated

PG - Pregalvanised

EZ - Electrogalvanised

BC - Electrogalvanised Bichromate

BK8 - High Resistance Coating

GC - Hot Dip Galvanising

INOX - Stainless Steel

PT - Polyester Paint

AL - Aluminum

LN - Brass or Nickel-plated brass

Ⓜ Insulating materials

PC+ABS - Halogen Free Polycarbonate + ABS

PVC - Polyvinyl Chloride

PP - Halogen Free Polypropylene

PA6 - Halogen Free Polyamide 6

PA12 - Halogen Free Polyamide 12

PU - Polyurethane

PE - Polyethylene

NBR - NBR rubber

PET - Thermoplastic Polyester

TPV - Thermoplastic

Any information included in this document is property of Pemsa®. It cannot be copied, total or partially, nor disclosed to third parties nor used without the explicit and written authorization by Pemsa®. These documents total or partially, can be subject to patent and/or be patent pending and therefore protected by intellectual and industrial property rights. Pemsa, Rejiband, Pemsaband, Inducanal, Rejitech, Megaband, Pemsaflex are registered trademarks property of "Pemsa Cable Management, S.A."

Part Clamp

Product applications

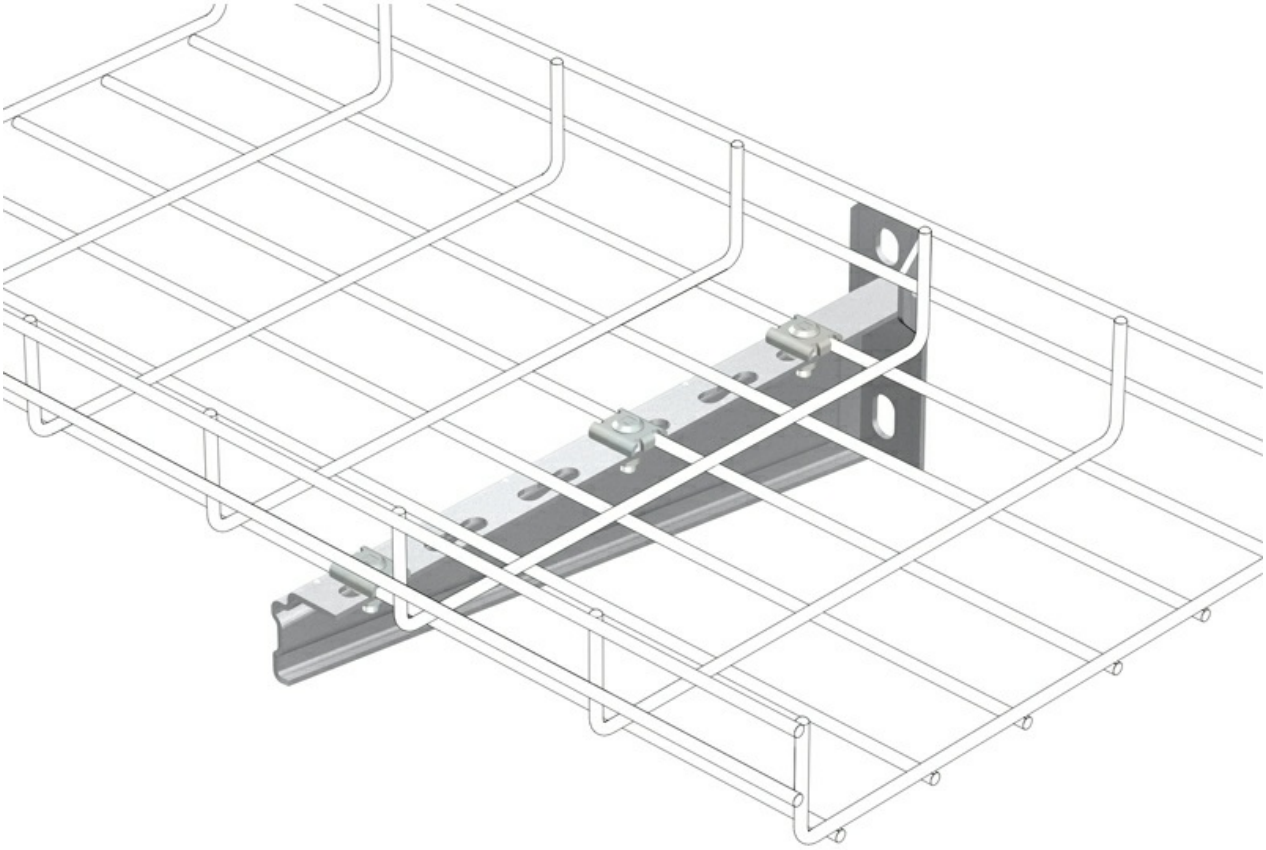

Any information included in this document is property of Pemsa®. It cannot be copied, total or partially, nor disclosed to third parties nor used without the explicit and written authorization by Pemsa®. These documents total or partially, can be subject to patent and/or be patent pending and therefore protected by intellectual and industrial property rights. Pemsa, Rejiband, Pemsaband, Inducanal, Rejitech, Megaband, Pemsaflex are registered trademarks property of "Pemsa Cable Management, S.A."

Part Clamp

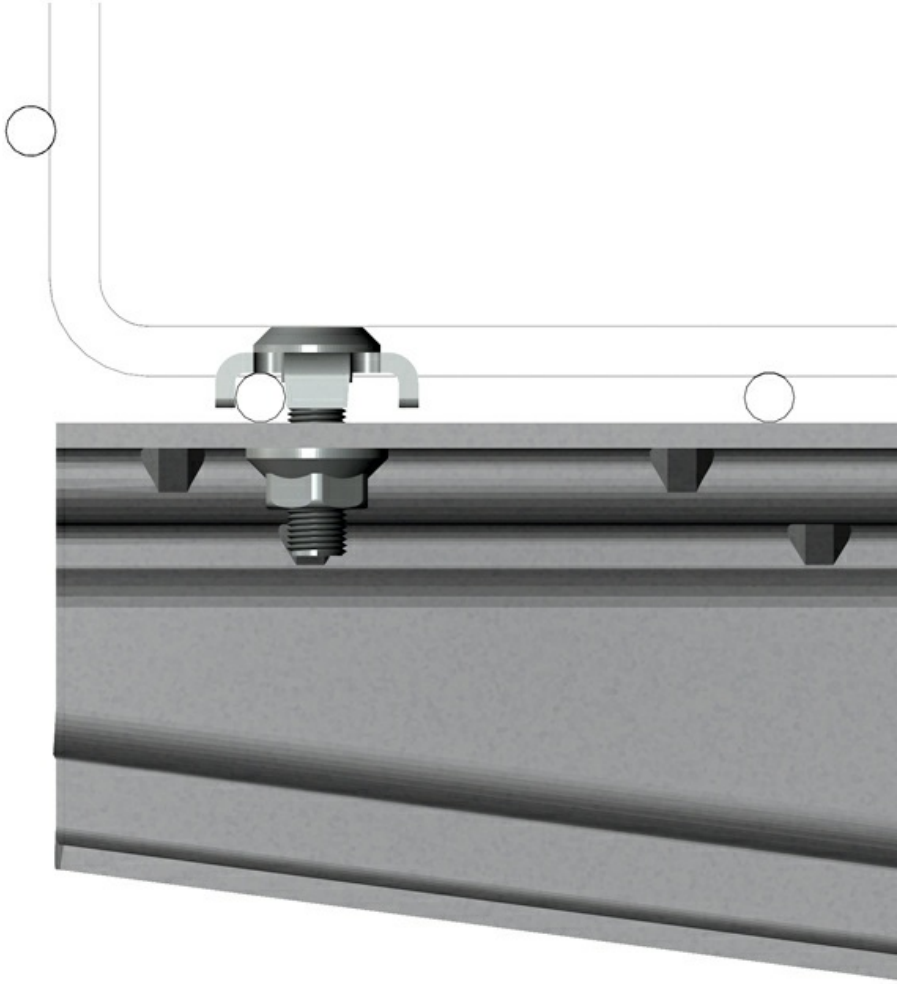

Any information included in this document is property of Pemsa®. It cannot be copied, total or partially, nor disclosed to third parties nor used without the explicit and written authorization by Pemsa®. These documents total or partially, can be subject to patent and/or be patent pending and therefore protected by intellectual and industrial property rights. Pemsa, Rejiband, Pemsaband, Inducanal, Rejitech, Megaband, Pemsaflex are registered trademarks property of "Pemsa Cable Management, S.A."