Vertical Angel Hanger

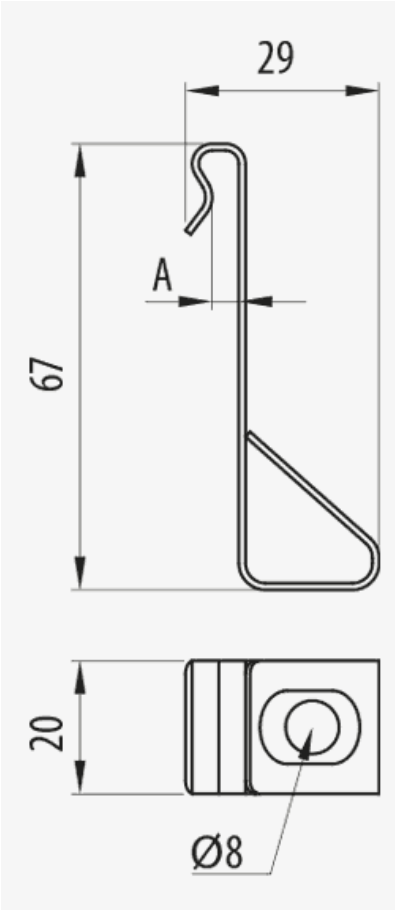

Description

Metal suspension clamp for vertical connection when installing Rejiband® wire mesh and Pemsaband® sheet trays onto a beam using M6 or M8 threaded rod. Admissible working load of 65 Kg. Assembly by means of the quick-connect click system without screws. Made of steel with EZ Protection System.

Advantages

Connection with M6 or M8 threaded rod using hexagonal nuts.

Connection with M6 or M8 threaded rod using hexagonal nuts.

Available in pre-galvanised and hot dip galvanised finishes.

Connection with M6 or M8 threaded rod using hexagonal nuts.

Connection with M6 or M8 threaded rod using hexagonal nuts.

CE conformity to directive 2014/35 / EU.

EZ protection system. Suitable for indoor installations and dry environments.

Applications

Suitable for indoor installation on beams with threaded rod for trays in the electrical wiring and telecommunications in public buildings, infrastructure, civil works and tertiary sector.

Solutions

Any information included in this document is property of Pemsa®. It cannot be copied, total or partially, nor disclosed to third parties nor used without the explicit and written authorization by Pemsa®. These documents total or partially, can be subject to patent and/or be patent pending and therefore protected by intellectual and industrial property rights. Pemsa, Rejiband, Pemsaband, Inducanal, Rejitech, Megaband, Pemsaflex are registered trademarks property of "Pemsa Cable Management, S.A."

Vertical Angel Hanger

Main technical characteristics

EZ | Class IEC 61537 Class 3 | kg/u 0.041 | 100 | Steel with surface coating | CTA 65 | -50 / 150 ºC | A1 No combustible | ETIM EC001003

Product data

Ø	A (mm)	B (mm)	REF
1.5 / 5	1.5	5	68000731
4 / 10	4	10	68000732

Protection System

CU - Copper electroplated

PG - Pregalvanised

EZ - Electrogalvanised

BC - Electrogalvanised Bichromate

BK8 - High Resistance Coating

GC - Hot Dip Galvanising

INOX - Stainless Steel

PT - Polyester Paint

AL - Aluminum

LN - Brass or Nickel-plated brass

Insulating materials

PC+ABS - Halogen Free Polycarbonate + ABS

PVC - Polyvinyl Chloride

PP - Halogen Free Polypropylene

PA6 - Halogen Free Polyamide 6

PA12 - Halogen Free Polyamide 12

PU - Polyurethane

PE - Polyethylene

NBR - NBR rubber

PET - Thermoplastic Polyester

TPV - Thermoplastic

Any information included in this document is property of Pemsa®. It cannot be copied, total or partially, nor disclosed to third parties nor used without the explicit and written authorization by Pemsa®. These documents total or partially, can be subject to patent and/or be patent pending and therefore protected by intellectual and industrial property rights. Pemsa, Rejiband, Pemsaband, Inducanal, Rejitech, Megaband, Pemsaflex are registered trademarks property of "Pemsa Cable Management, S.A."

Vertical Angel Hanger

Product applications

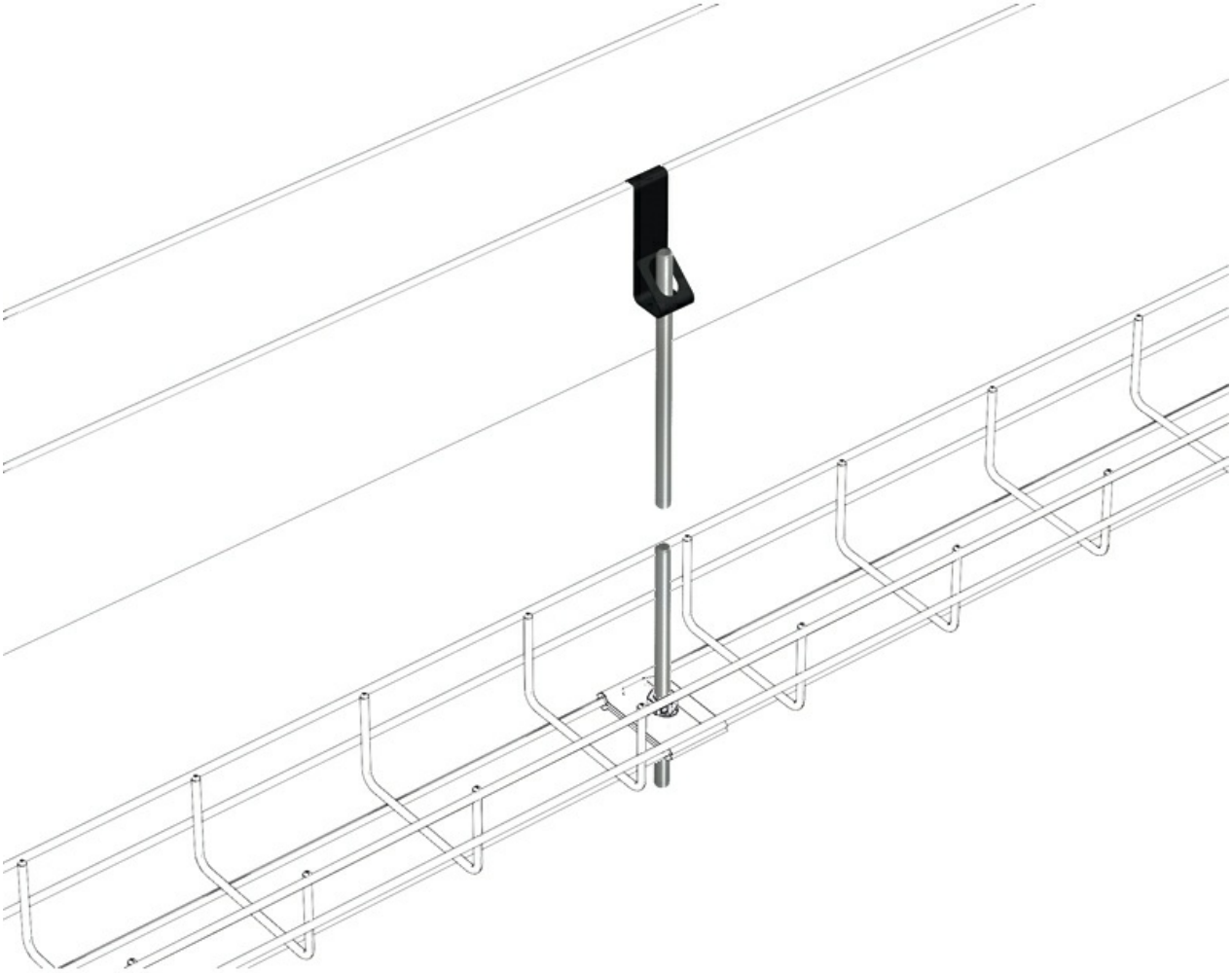

Any information included in this document is property of Pemsa®. It cannot be copied, total or partially, nor disclosed to third parties nor used without the explicit and written authorization by Pemsa®. These documents total or partially, can be subject to patent and/or be patent pending and therefore protected by intellectual and industrial property rights. Pemsa, Rejiband, Pemsaband, Inducanal, Rejitech, Megaband, Pemsaflex are registered trademarks property of "Pemsa Cable Management, S.A."

Vertical Angel Hanger

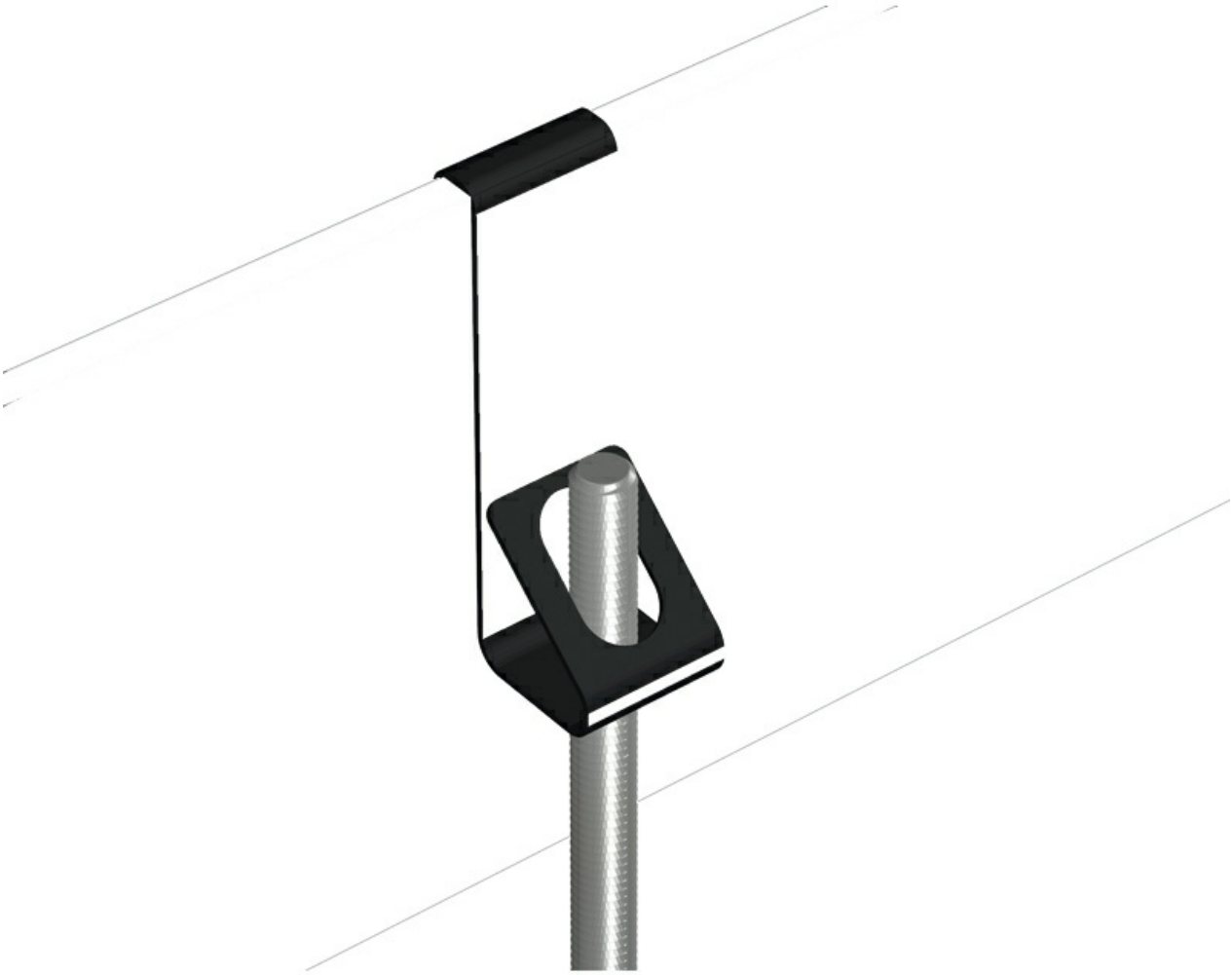

Any information included in this document is property of Pemsa®. It cannot be copied, total or partially, nor disclosed to third parties nor used without the explicit and written authorization by Pemsa®. These documents total or partially, can be subject to patent and/or be patent pending and therefore protected by intellectual and industrial property rights. Pemsa, Rejiband, Pemsaband, Inducanal, Rejitech, Megaband, Pemsaflex are registered trademarks property of "Pemsa Cable Management, S.A."