MEGAband Joint Kit

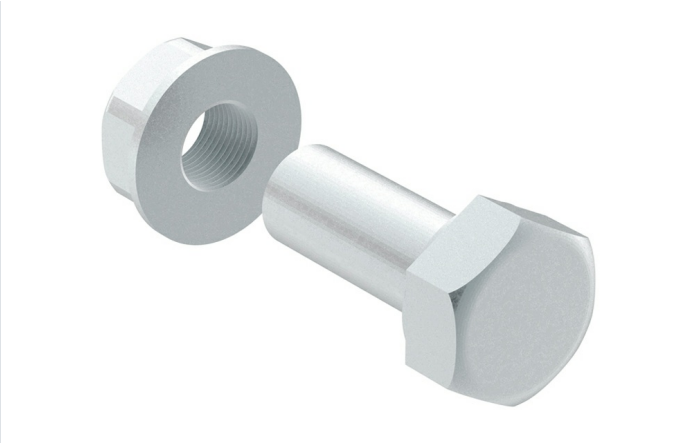

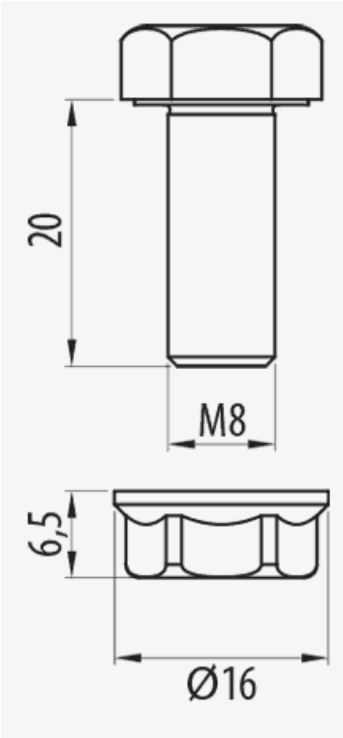

Description

Coupling kit for connecting trays and accessories, consisting of M8x20 hexagonal head bolt and M8 metal nut for Megaband® ladder installations, maintaining electrical continuity according to IEC 61537. Suitable for all ladder sizes. Made of steel, and available in various Protection Systems.

Advantages

It allows the connection of Megaband® ladder lengths and the fixing of joints for cut sections.

Very versatile piece for use in any joint along with a M8 hexagonal nut.

Conforms to IEC 61537 and CE Conformity to Directive 2014/35/EU.

Electrical continuity guaranteed according to standard IEC61537.

Suitable for all sizes of cable tray.

Applications

Suitable for the fixing of joints, supports and channel structures for installations of Megaband® ladder in the management of electrical cables and / or telecommunications in public buildings, infrastructures and civil works, industrial facilities, tertiary sector.

Solutions

Any information included in this document is property of Pemsa®. It cannot be copied, total or partially, nor disclosed to third parties nor used without the explicit and written authorization by Pemsa®. These documents total or partially, can be subject to patent and/or be patent pending and therefore protected by intellectual and industrial property rights. Pemsa, Rejiband, Pemsaband, Inducanal, Rejitech, Megaband, Pemsaflex are registered trademarks property of "Pemsa Cable Management, S.A."

MEGAband Joint Kit

Main technical characteristics

ETIM
EC002935

Product data

Ⓢ	Class IEC 61537			REF	kg/u		Ⓜ		
GC	Class 8	M 8	20	67030094	0.018	100	Steel with surface coating	-50 / 150 ºC	A1 No combustible

Ⓢ Protection System

CU - Copper electroplated

PG - Pregalvanised

EZ - Electrogalvanised

BC - Electrogalvanised Bichromate

BK8 - High Resistance Coating

GC - Hot Dip Galvanising

INOX - Stainless Steel

PT - Polyester Paint

AL - Aluminum

LN - Brass or Nickel-plated brass

Ⓜ Insulating materials

PC+ABS - Halogen Free Polycarbonate + ABS

PVC - Polyvinyl Chloride

PP - Halogen Free Polypropylene

PA6 - Halogen Free Polyamide 6

PA12 - Halogen Free Polyamide 12

PU - Polyurethane

PE - Polyethylene

NBR - NBR rubber

PET - Thermoplastic Polyester

TPV - Thermoplastic

Any information included in this document is property of Pemsa®. It cannot be copied, total or partially, nor disclosed to third parties nor used without the explicit and written authorization by Pemsa®. These documents total or partially, can be subject to patent and/or be patent pending and therefore protected by intellectual and industrial property rights. Pemsa, Rejiband, Pemsaband, Inducanal, Rejitech, Megaband, Pemsaflex are registered trademarks property of "Pemsa Cable Management, S.A."

MEGAband Joint Kit

Product applications

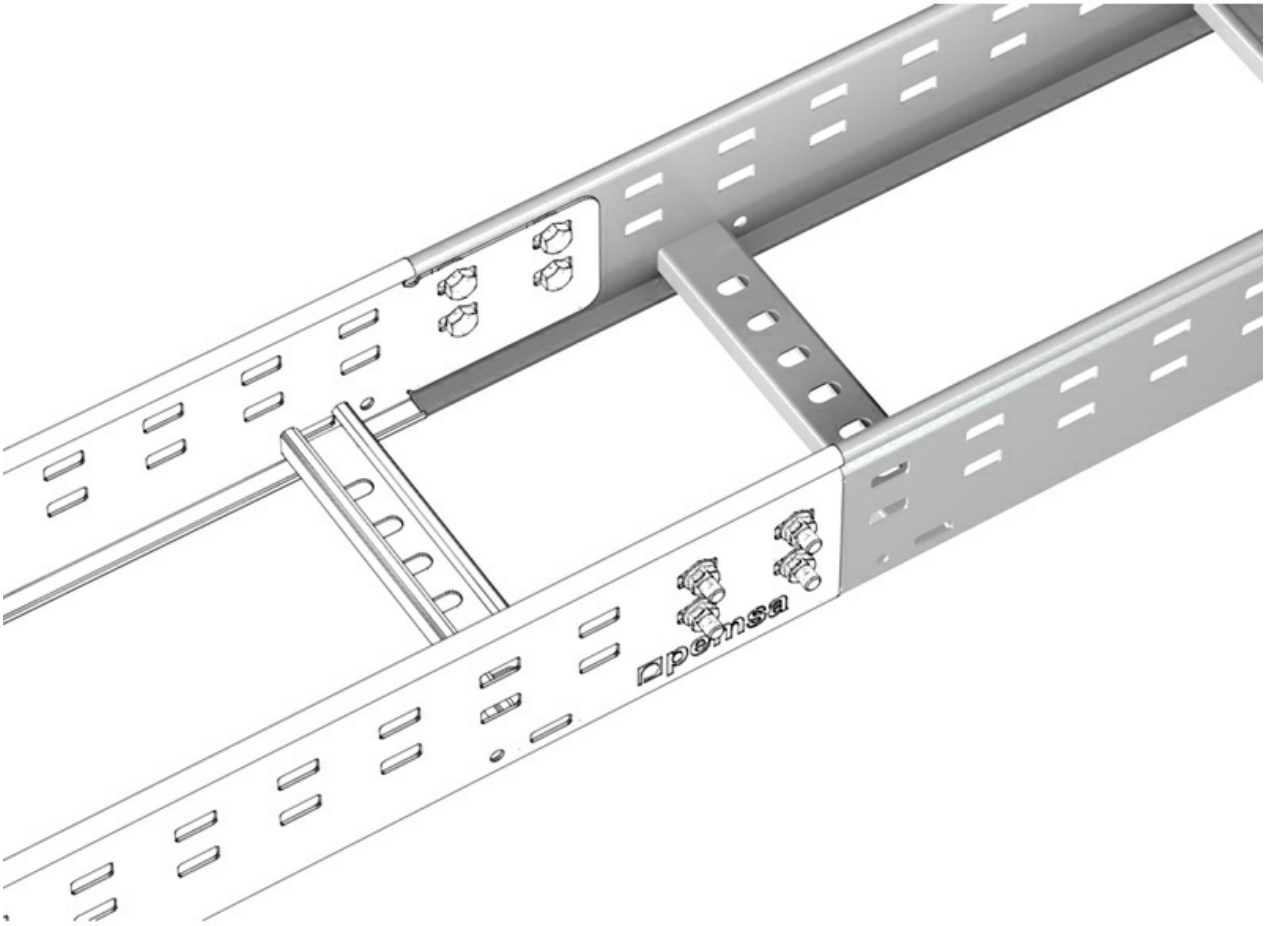

Any information included in this document is property of Pemsa®. It cannot be copied, total or partially, nor disclosed to third parties nor used without the explicit and written authorization by Pemsa®. These documents total or partially, can be subject to patent and/or be patent pending and therefore protected by intellectual and industrial property rights. Pemsa, Rejiband, Pemsaband, Inducanal, Rejitech, Megaband, Pemsaflex are registered trademarks property of "Pemsa Cable Management, S.A."

MEGAband Joint Kit

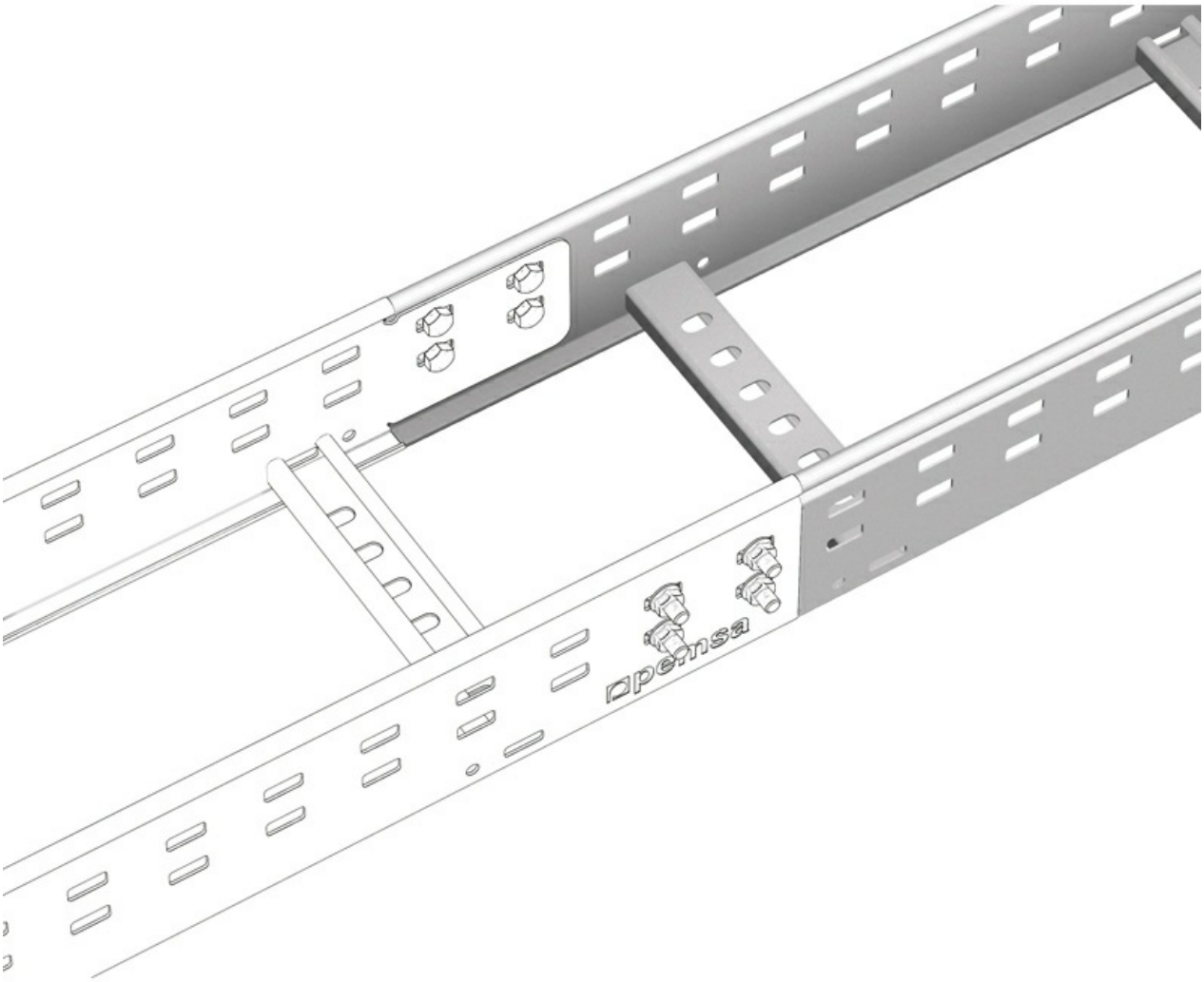

Any information included in this document is property of Pemsa®. It cannot be copied, total or partially, nor disclosed to third parties nor used without the explicit and written authorization by Pemsa®. These documents total or partially, can be subject to patent and/or be patent pending and therefore protected by intellectual and industrial property rights. Pemsa, Rejiband, Pemsaband, Inducanal, Rejitech, Megaband, Pemsaflex are registered trademarks property of "Pemsa Cable Management, S.A."