Metatray perforated tray (Ref: 82004161)

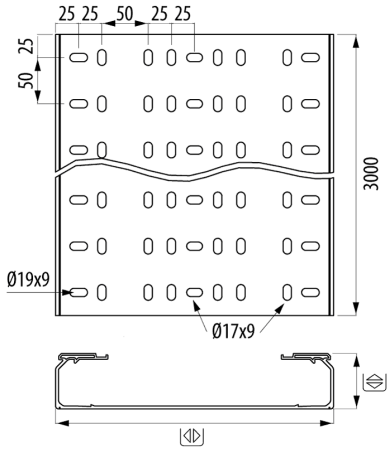

Description

Perforated tray made of insulating material. Of 60 mm height, Width 150 mm. Grey RAL 7035 colour for the support, protection and conduction of cables. Maximum functionality and adaptation to different spaces and environments. Excellent performance in corrosive environments, weathering and exposure to UV radiation. Wide range of accessories with multiple applications. Tray with cover(insulating protective trunking) according to EN 50085. Complies with REACH and ROHS III directives. Free of dangerous substances.

Advantages

Excellent performance in corrosive environments, weather and exposure to UV radiation.

Protection grade IP 2X and Impact Grade 20 J, 10 J 60x100 (EN 61537) and IK10 (EN50085)

The perforations in the longitudinal direction assist in the fixing and clamping of the cables.

Insulating material, electrical safety and reduced maintenance costs.

Non-flame-propagating. Reaction to fire, V0 grade and M1 classification

Applications

Suitable for supporting, protecting and guiding cables in electrical and telecommunications installations in different sectors from wastewater treatment plants to the chemical and petrochemical industry, establishing itself as a highly corrosion-resistant solution that meets the most demanding standards. Its application is also ideal in other different sectors: service, telecommunications, electric mobility through vehicle charging stations etc.

Solutions

Any information included in this document is property of Pemsa®. It cannot be copied, total or partially, nor disclosed to third parties nor used without the explicit and written authorization by Pemsa®. These documents total or partially, can be subject to patent and/or be patent pending and therefore protected by intellectual and industrial property rights. Pemsa, Rejiband, Pemsaband, Inducanal, Rejitech, Megaband, Pemsaflex are registered trademarks property of "Pemsa Cable Management, S.A."

Metatray perforated tray (Ref: 82004161)

Product data

ETIM 10	EC000047	**Impact Strength (J)**	20 J
Huella de CO2. GWP A1-A3 (kg CO2 eq.)	0,003	**Section (mm2)**	7183
Colour	Grey RAL 7035	**IP**	IP23
Flange (mm)	60	**Working temperature range (°C)**	-20 / 60 °C
Width (mm)	150	**Fire resistance**	GRADO UL94: V0
Length (m)	3	**UV Behaviour**	Resistant acc. to UL568
kg/u	1,276		
u	12		
Material	PVC		

Ⓢ Protection System

CU - Copper electroplated

PG - Pregalvanised

EZ - Electrogalvanised

BC - Electrogalvanised Bichromate

BK8 - High Resistance Coating

GC - Hot Dip Galvanising

INOX - Stainless Steel

PT - Polyester Paint

AL - Aluminum

LN - Brass or Nickel-plated brass

Ⓜ Insulating materials

PC+ABS - Halogen Free Polycarbonate + ABS

PVC - Polyvinyl Chloride

PP - Halogen Free Polypropylene

PA6 - Halogen Free Polyamide 6

PA12 - Halogen Free Polyamide 12

PU - Polyurethane

PE - Polyethylene

NBR - NBR rubber

PET - Thermoplastic Polyester

TPV - Thermoplastic

Any information included in this document is property of Pemsa®. It cannot be copied, total or partially, nor disclosed to third parties nor used without the explicit and written authorization by Pemsa®. These documents total or partially, can be subject to patent and/or be patent pending and therefore protected by intellectual and industrial property rights. Pemsa, Rejiband, Pemsaband, Inducanal, Rejitech, Megaband, Pemsaflex are registered trademarks property of "Pemsa Cable Management, S.A."

Metatray perforated tray (Ref: 82004161)

Load diagrams

Cargas de trabajo adimisibles (CTA) y datos dimensionales / *Safety working loads (SWL) and dimensional data Charges de travail admissibles (CTA) et données dimensionnelles / Cargas de trabalho admissíveis (CTA) e dados dimensionais*

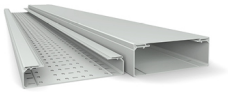

Bandejas **metatray**® perforadas y ciegas / *Perforated and solid* **metatray**® *cable trays Chemins de câbles* **metatray**® *perforés et pleins / Caminhos de cabos* **metatray**® *perfurados e não perfurados*

Secciones útiles mm² / *Useful cross sections mm² / Sections utiles mm² / Secções úteis mm²*

x	60x100	60x150	60x200	60x300	60x400	100x200	100x300	100x400	100x500	100x600
mm²	4666	7183	9692	14869	19934	16611	25229	33825	42360	50917

Ensayos Carga de trabajo admisible (CTA) para bandejas (N/m) / *Safety working loads (SWL) tests for cable trays (N/m) / Essais de charge de travail admissible (CTA) pour les chemins de câbles (N/m) / Ensaios Carga de trabalho admissível (CTA) para caminhos de cabos (N/m)*

		60x100	60x150	60x200	60x300	60x400	100x200	100x300	100x400	100x500	100x600
60°C	1 m	120	150	250	350	450	400	450	600	700	800
40ºC	1,5 m										

Los ensayos CTA de las medidas de 300 a 600 han sido realizados con las uniones centrales refuerzo, referencias 82004223 y 82004224. / *The SWL tests from 300 to 600 were performed with the reinforced central joints, references 82004223 and 82004224.*

Condiciones del ensayo de carga de trabajo admisible para bandejas EN 61537 / *Safety working load test conditions for cable trays EN 61537 / Conditions de l'essai de charge de travail admissible pour les chemins de câbles selon la norme EN 61537 / Condições do ensaio de carga de trabalho admissível para caminhos de cabos EN 61537*

Temperatura / *Temperature* / Température / *Temperatura*	40ºC	60ºC
Distancia entre soportes / *Support Span* / *Distance entre les supports* / *Distância entre suportes*	1,5 m	1 m
Flecha longitudinal / *Longitudinal deflection* / *Flèche longitudinale* / *Seta longitudinal*	Inferior al 1% de distancia entre soportes / Less than 1% support span / *Inférieure à 1 % de la distance entre les supports* / *Inferior a 1% de distância entre suportes*	
Flecha transversal / *Transverse deflection* / Flèche transversale / *Seta transversal*	Inferior al 5% del ancho de la bandeja / Less than 5% of the cable tray width / *Inférieure à 5 % de la largeur du chemin de câbles* / *Inferior a 5% da largura do caminho de cabos*	
Ubicación de uniones *Placement of joints* *Emplacement des éclisses* *Localização de uniões*	(L/4) > u > (L/5) 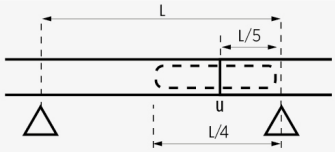	
Factor de seguridad sin alcanzar colapso *Increased safety coefficient* *Facteur de sécurité sans effondrement* *Fator de segurança sem alcançar colapso*	1,7 veces la carga de trabajo de seguridad declarada *1.7 times the declared safety working load* *1,7 fois la charge de travail sécurisée déclarée* *1,7 vezes a carga de trabalho de segurança declarada*	

Product applications

Any information included in this document is property of Pemsa®. It cannot be copied, total or partially, nor disclosed to third parties nor used without the explicit and written authorization by Pemsa®. These documents total or partially, can be subject to patent and/or be patent pending and therefore protected by intellectual and industrial property rights. Pemsa, Rejiband, Pemsaband, Inducanal, Rejitech, Megaband, Pemsaflex are registered trademarks property of "Pemsa Cable Management, S.A."

Metatray perforated tray (Ref: 82004161)

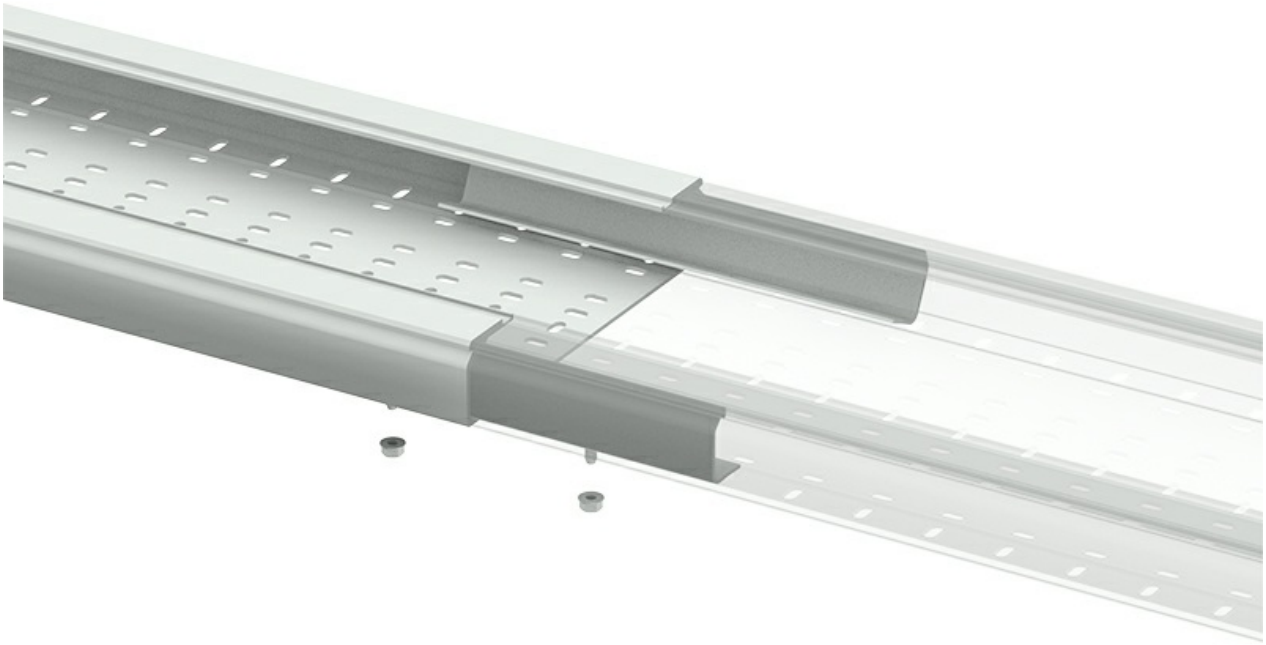

Any information included in this document is property of Pemsa®. It cannot be copied, total or partially, nor disclosed to third parties nor used without the explicit and written authorization by Pemsa®. These documents total or partially, can be subject to patent and/or be patent pending and therefore protected by intellectual and industrial property rights. Pemsa, Rejiband, Pemsaband, Inducanal, Rejitech, Megaband, Pemsaflex are registered trademarks property of "Pemsa Cable Management, S.A."