Ladder Tray Accessories

Reducer PEMSAband (Ref: 71032020)

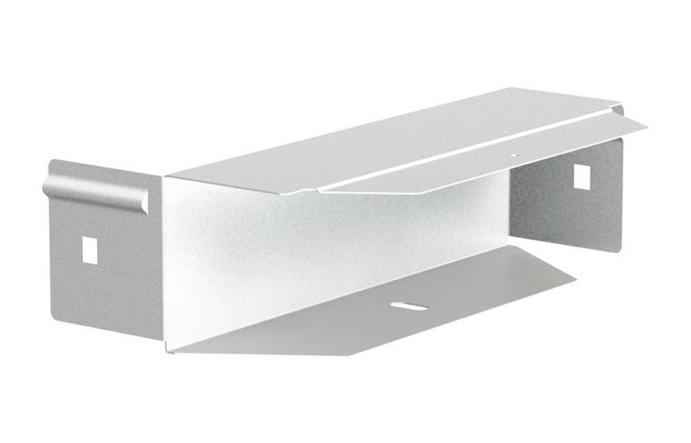

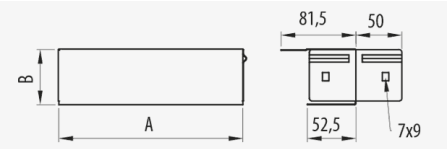

Description

Width 200 mm, With GC protection system, HDG finish

Advantages

Applications

Solutions

Any information included in this document is property of Pemsa®. It cannot be copied, total or partially, nor disclosed to third parties nor used without the explicit and written authorization by Pemsa®. These documents total or partially, can be subject to patent and/or be patent pending and therefore protected by intellectual and industrial property rights. Pemsa, Rejiband, Pemsaband, Inducanal, Rejitech, Megaband, Pemsaflex are registered trademarks property of "Pemsa Cable Management, S.A."

Reducer PEMSAband (Ref: 71032020)

Product data

ETIM 10	EC002413	**u**	1
Huella de CO2. GWP A1-A3 (kg CO2 eq.)		**Material**	Steel with surface coating
Protection System	GC	**IP**	IP44
Finish	HDG, Hot Dip Galvanised	**Working temperature range (°C)**	-50 / 150 °C
Resistance Class	Class 5	**Fire resistance**	A1 No combustible
Flange (mm)	60		
Width (mm)	200		
kg/u	0,273		

Ⓢ Protection System

CU - Copper electroplated

PG - Pregalvanised

EZ - Electrogalvanised

BC - Electrogalvanised Bichromate

BK8 - High Resistance Coating

GC - Hot Dip Galvanising

INOX - Stainless Steel

PT - Polyester Paint

AL - Aluminum

LN - Brass or Nickel-plated brass

Ⓜ Insulating materials

PC+ABS - Halogen Free Polycarbonate + ABS

PVC - Polyvinyl Chloride

PP - Halogen Free Polypropylene

PA6 - Halogen Free Polyamide 6

PA12 - Halogen Free Polyamide 12

PU - Polyurethane

PE - Polyethylene

NBR - NBR rubber

PET - Thermoplastic Polyester

TPV - Thermoplastic

Any information included in this document is property of Pemsa®. It cannot be copied, total or partially, nor disclosed to third parties nor used without the explicit and written authorization by Pemsa®. These documents total or partially, can be subject to patent and/or be patent pending and therefore protected by intellectual and industrial property rights. Pemsa, Rejiband, Pemsaband, Inducanal, Rejitech, Megaband, Pemsaflex are registered trademarks property of "Pemsa Cable Management, S.A."

Reducer PEMSAband (Ref: 71032020)

Product applications

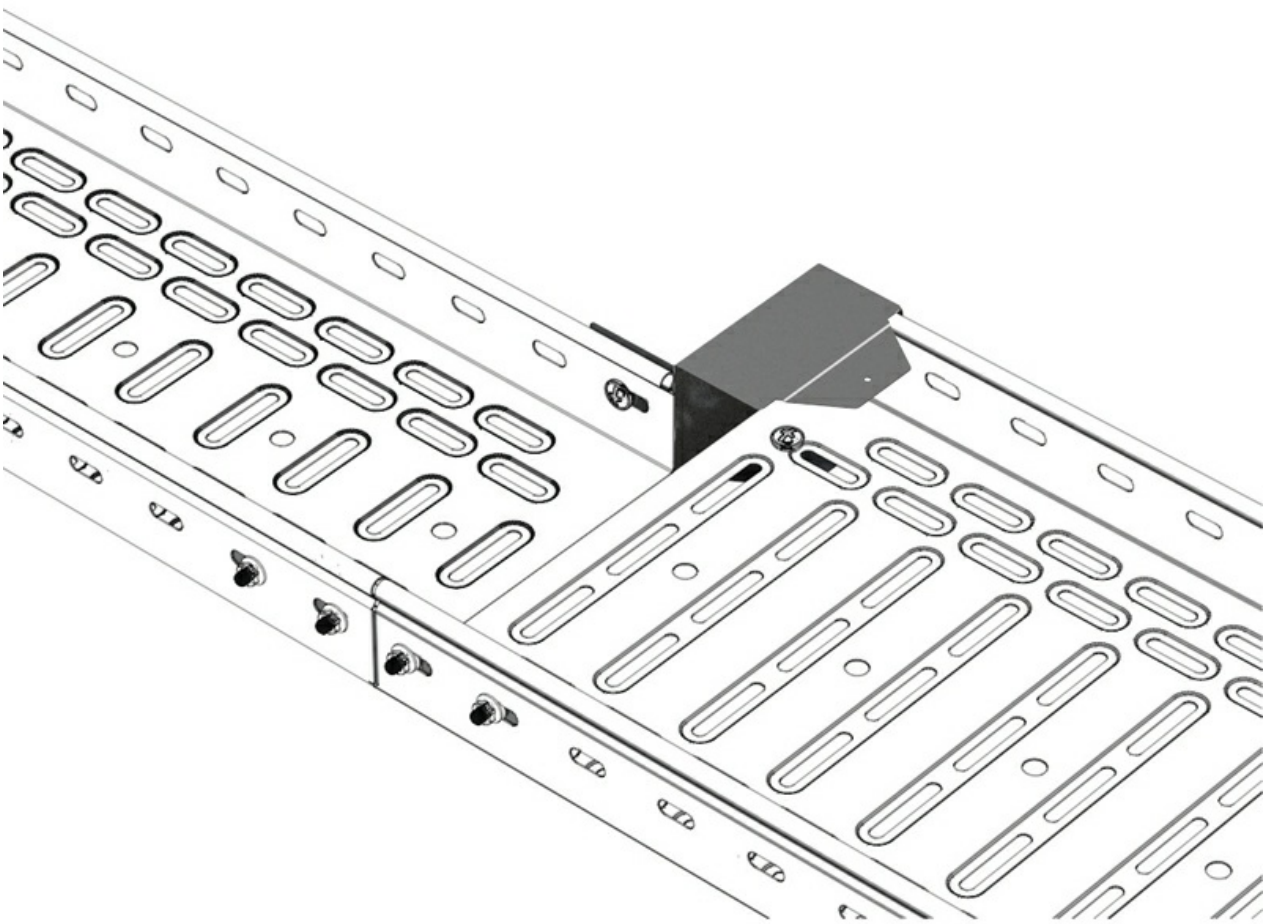

Any information included in this document is property of Pemsa®. It cannot be copied, total or partially, nor disclosed to third parties nor used without the explicit and written authorization by Pemsa®. These documents total or partially, can be subject to patent and/or be patent pending and therefore protected by intellectual and industrial property rights. Pemsa, Rejiband, Pemsaband, Inducanal, Rejitech, Megaband, Pemsaflex are registered trademarks property of "Pemsa Cable Management, S.A."

Reducer PEMSAband (Ref: 71032020)

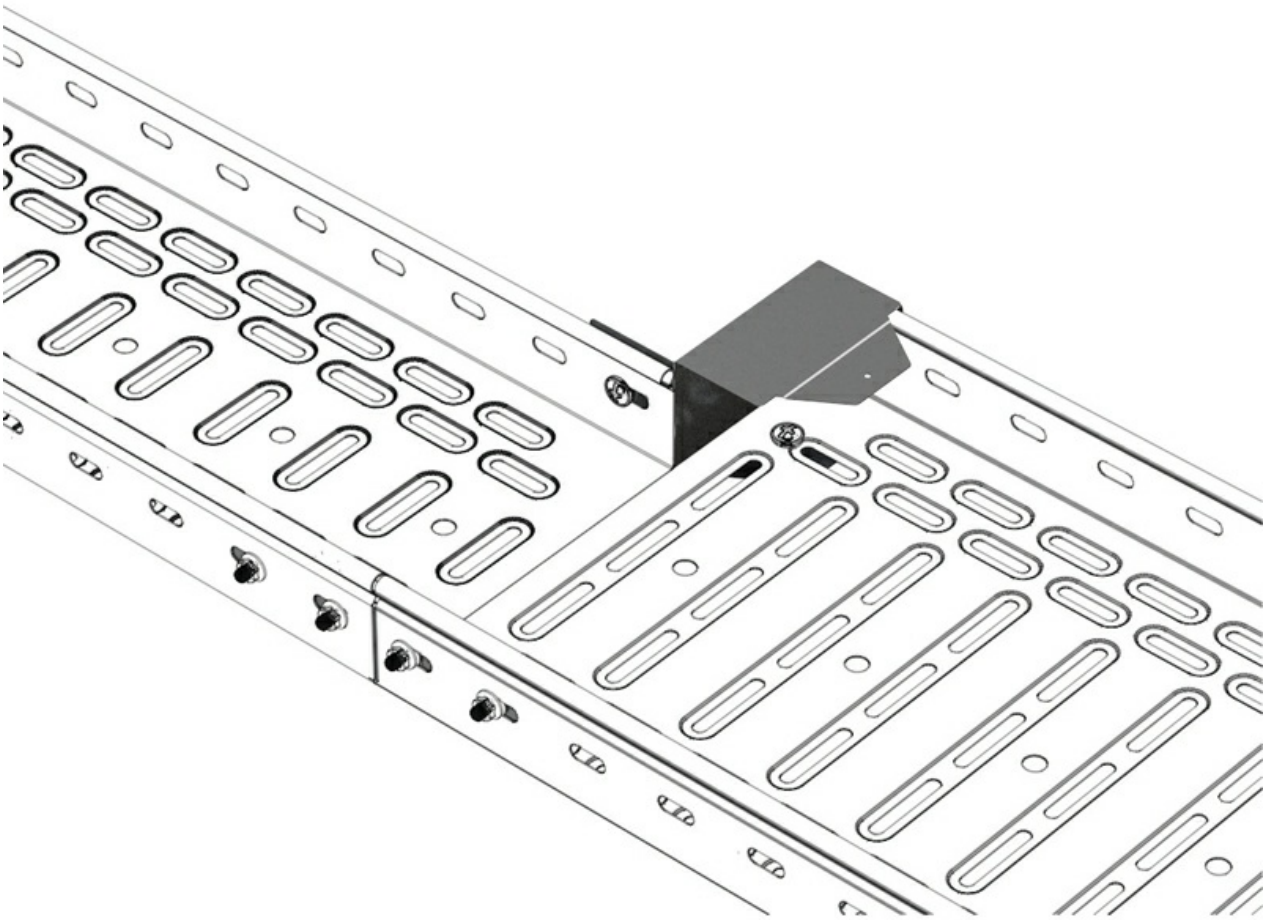

Any information included in this document is property of Pemsa®. It cannot be copied, total or partially, nor disclosed to third parties nor used without the explicit and written authorization by Pemsa®. These documents total or partially, can be subject to patent and/or be patent pending and therefore protected by intellectual and industrial property rights. Pemsa, Rejiband, Pemsaband, Inducanal, Rejitech, Megaband, Pemsaflex are registered trademarks property of "Pemsa Cable Management, S.A."

Reducer PEMSAband (Ref: 71032020)

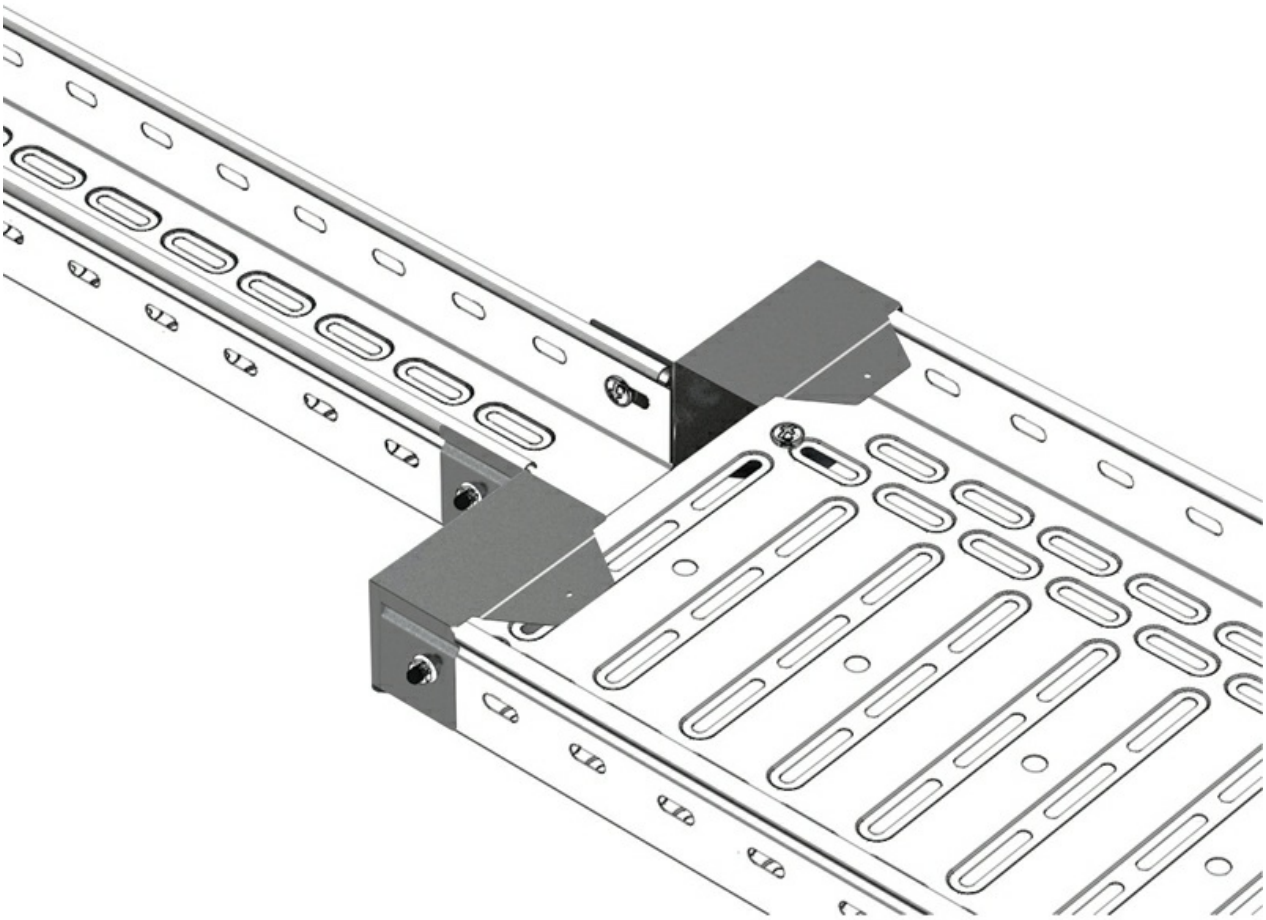

www.pemsa-rejiband.com

Any information included in this document is property of Pemsa®. It cannot be copied, total or partially, nor disclosed to third parties nor used without the explicit and written authorization by Pemsa®. These documents total or partially, can be subject to patent and/or be patent pending and therefore protected by intellectual and industrial property rights. Pemsa, Rejiband, Pemsaband, Inducanal, Rejitech, Megaband, Pemsaflex are registered trademarks property of "Pemsa Cable Management, S.A."

Reducer PEMSAband (Ref: 71032020)

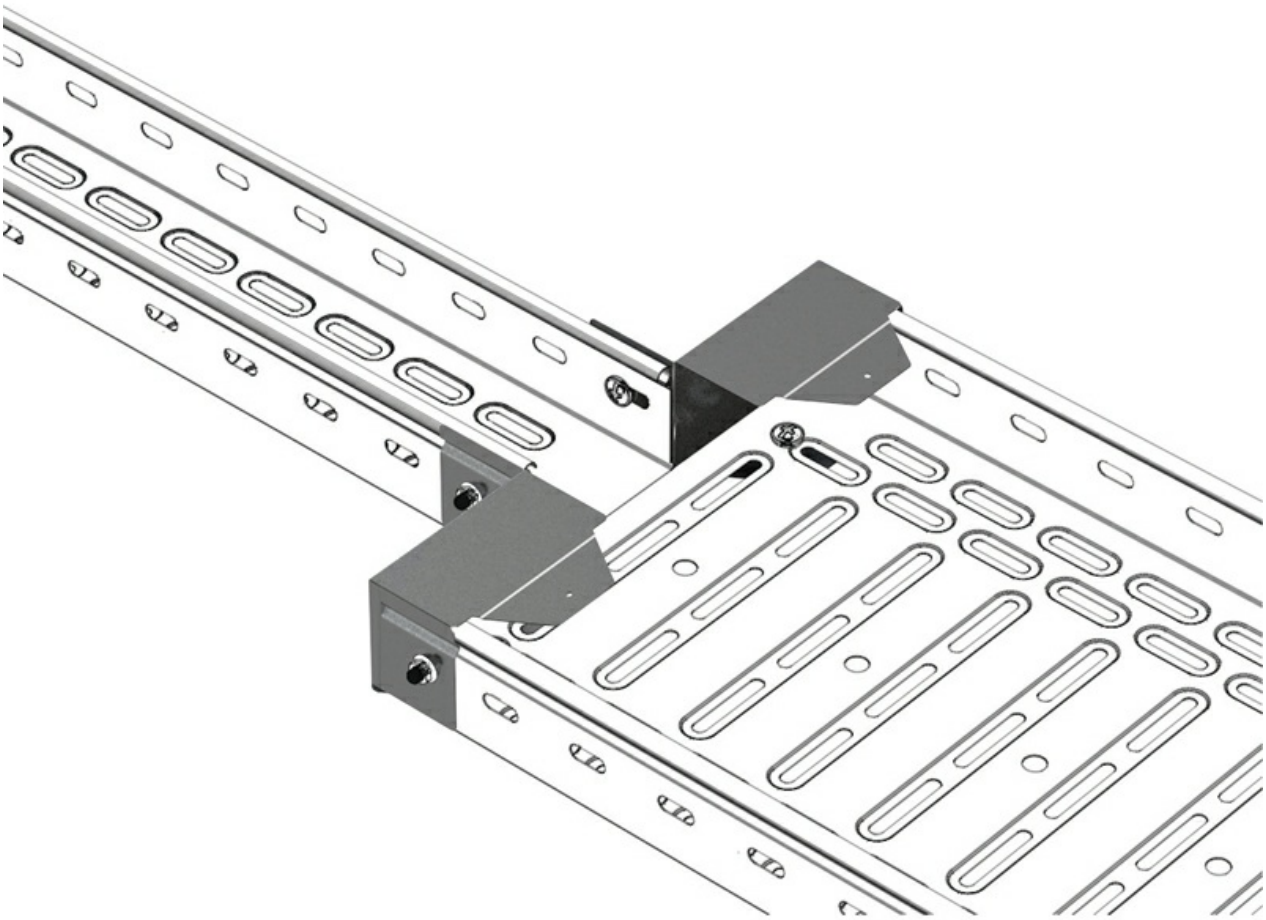

Any information included in this document is property of Pemsa®. It cannot be copied, total or partially, nor disclosed to third parties nor used without the explicit and written authorization by Pemsa®. These documents total or partially, can be subject to patent and/or be patent pending and therefore protected by intellectual and industrial property rights. Pemsa, Rejiband, Pemsaband, Inducanal, Rejitech, Megaband, Pemsaflex are registered trademarks property of "Pemsa Cable Management, S.A."