IRIS-P Cablegland

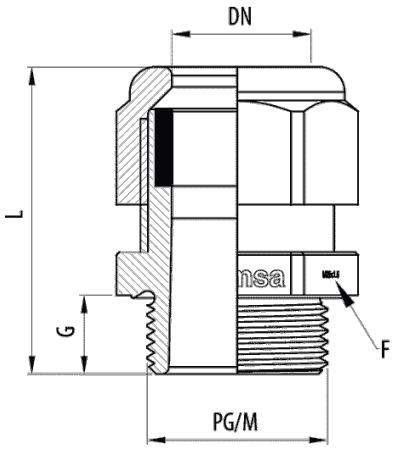

Description

Cable gland with diaphragm closure system and NBR seal with an IP68 protection rating (5 bar) according to EN 60529. Available in metric threads from M12 to M63 and in threads PG7 to PG48 for various cable diameters. UL Classified Certification. Manufactured in self-extinguishing polyamide 6 in light grey RAL 7035, grey RAL 7001 and black RAL 9005.

Advantages

Manufactured in polyamide 6. Self-extinguishing, halogen-free according to UNE/EN 60754-2 y UNE/EN 60754-1 and flame-retardant.

Protection index EN 60529: IP68 with 5 bars of pressure for immersion in water.

Diaphragm closure system with NBR inner seal.

Working temperature: -25°C to + 90°C.

UL Classified Certification. CE conformance with the 2014/35 directive and the IEC 62444 standard.

Applications

Its use is recommended for the protection of wiring and conductors with high sealing requirements in general installations, manufacturing of OEM equipment and i industrial applications.

Solutions

RENEWABLE ENERGIES

Any information included in this document is property of Pemsa®. It cannot be copied, total or partially, nor disclosed to third parties nor used without the explicit and written authorization by Pemsa®. These documents total or partially, can be subject to patent and/or be patent pending and therefore protected by intellectual and industrial property rights. Pemsa, Rejiband, Pemsaband, Inducanal, Rejitech, Megaband, Pemsaflex are registered trademarks property of "Pemsa Cable Management, S.A."

IRIS-P Cablegland

Main technical characteristics

Colour Grey RAL 7035, Black RAL 9005, Grey RAL 7001

PG 7, PG 9, PG11, PG13, PG16, PG21, PG29, PG36, PG42, PG48, M12, M16, M20, M25, M32, M40, M50, M63

POLIAMIDA 6,TPV

IP68

LIBRE DE HALÓGENOS,NO PROPAGADOR DE LA LLAMA

ETIM 10
EC000441

Product data

Colour					L (mm)		Ref	kg/u		
Grey RAL 7035	PG 7	8	3 / 6.5	9	32	15	21040007	0,003	50	-25 / 90 ºC
Grey RAL 7035	PG 9	8	4 / 8	11	36	19	21040009	0,005	50	-25 / 90 ºC
Grey RAL 7035	PG11	8	5 / 10	14	37	22	21040011	0,008	50	-25 / 90 ºC
Grey RAL 7035	PG13	9	6 / 12	16	38	24	21040013	0,010	50	-25 / 90 ºC
Grey RAL 7035	PG16	9	10 / 14	18	42	27	21040016	0,013	50	-25 / 90 ºC
Grey RAL 7035	PG21	11	13 / 18	22	49	33	21040021	0,021	50	-25 / 90 ºC
Grey RAL 7035	PG29	11	18 / 25	30	52	42	21040029	0,037	25	-25 / 90 ºC
Grey RAL 7035	PG36	13	22 / 32	39	64	53	21040036	0,066	10	-25 / 90 ºC
Grey RAL 7035	PG42	13	30 / 38	45	66	60	21040042	0,081	5	-25 / 90 ºC
Grey RAL 7035	PG48	14	34 / 44	51	69	65	21040048	0,092	5	-25 / 90 ºC
Grey RAL 7035	M12	8	3 / 6.5	9	32	15	21041120	0,003	50	-25 / 90 ºC
Grey RAL 7035	M16	8	4 / 8	11	36	19	21041160	0,006	50	-25 / 90 ºC
Grey RAL 7035	M16	10	5 / 10	14	39	22	21041161	0,006	50	-25 / 90 ºC
Grey RAL 7035	M20	10	6 / 12	16	39	24	21041200	0,010	50	-25 / 90 ºC
Grey RAL 7035	M20	10	10 / 14	18	43	27	21041201	0,010	50	-25 / 90 ºC
Grey RAL 7035	M25	10	13 / 18	22	48	33	21041250	0,021	50	-25 / 90 ºC
Grey RAL 7035	M32	10	18 / 25	30	51	42	21041320	0,040	25	-25 / 90 ºC
Grey RAL 7035	M40	10	22 / 32	39	61	53	21041400	0,080	10	-25 / 90 ºC
Grey RAL 7035	M50	18	32 / 38	45	71	60	21041500	0,103	5	-25 / 90 ºC
Grey RAL 7035	M63	18	37 / 44	51	73	70	21041630	0,143	5	-25 / 90 ºC
Grey RAL 7035	PG 7	15	3 / 6.5	9	39	15	21044007	0,004	100	-20 / 100 ºC
Grey RAL 7035	PG 9	15	4 / 8	11	43	19	21044009	0,007	100	-20 / 100 ºC
Grey RAL 7035	PG11	15	5 / 10	11	44	22	21044011	0,008	100	-20 / 100 ºC
Grey RAL 7035	PG13	15	6 / 12	16	44	24	21044013	0,010	100	-20 / 100 ºC
Grey RAL 7035	PG16	15	10 / 14	18	48	27	21044016	0,014	100	-20 / 100 ºC
Grey RAL 7035	PG21	15	13 / 18	22	53	33	21044021	0,022	50	-20 / 100 ºC
Grey RAL 7035	M12	15	3 / 6.5	9	39	15	21045120	0,005	100	-20 / 100 ºC
Grey RAL 7035	M16	15	4 / 8	11	43	19	21045160	0,011	100	-20 / 100 ºC
Grey RAL 7035	M16	15	5 / 10	11	29	22	21045161	0,010	100	-20 / 100 ºC
Grey RAL 7035	M20	15	6 / 12	16	44	24	21045200	0,012	50	-20 / 100 ºC
Grey RAL 7035	M20	15	10 / 14	18	48	27	21045201	0,014	100	-20 / 100 ºC
Grey RAL 7035	M25	15	13 / 18	22	53	33	21045250	0,022	50	-20 / 100 ºC
Grey RAL 7035	M32	18	18 / 25	30	59	42	21045320	0,039	25	-20 / 100 ºC
Grey RAL 7035	M40	18	22 / 32	39	69	53	21045400	0,071	10	-20 / 100 ºC

Any information included in this document is property of Pemsa®. It cannot be copied, total or partially, nor disclosed to third parties nor used without the explicit and written authorization by Pemsa®. These documents total or partially, can be subject to patent and/or be patent pending and therefore protected by intellectual and industrial property rights. Pemsa, Rejiband, Pemsaband, Inducanal, Rejitech, Megaband, Pemsaflex are registered trademarks property of "Pemsa Cable Management, S.A."

IRIS-P Cablegland

Colour					L (mm)		Ref	kg/u		
Black RAL 9005	PG 7	8	3 / 6.5	9	32	15	21050007	0,003	50	-25 / 90 ºC
Black RAL 9005	PG 9	8	4 / 8	11	36	19	21050009	0,005	50	-25 / 90 ºC
Black RAL 9005	PG11	8	5 / 10	14	37	22	21050011	0,008	50	-25 / 90 ºC
Black RAL 9005	PG13	9	6 / 12	16	38	24	21050013	0,010	50	-25 / 90 ºC
Black RAL 9005	PG16	9	10 / 14	18	42	27	21050016	0,013	50	-25 / 90 ºC
Black RAL 9005	PG21	11	13 / 18	22	49	33	21050021	0,021	50	-25 / 90 ºC
Black RAL 9005	PG29	11	18 / 25	30	52	42	21050029	0,037	25	-25 / 90 ºC
Black RAL 9005	PG36	13	22 / 32	39	64	53	21050036	0,066	10	-25 / 90 ºC
Black RAL 9005	PG42	13	30 / 38	45	66	60	21050042	0,081	5	-25 / 90 ºC
Black RAL 9005	PG48	14	34 / 44	51	69	65	21050048	0,092	5	-25 / 90 ºC
Black RAL 9005	M12	8	3 / 6.5	9	32	15	21051120	0,003	50	-25 / 90 ºC
Black RAL 9005	M16	8	4 / 8	11	36	19	21051160	0,006	50	-25 / 90 ºC
Black RAL 9005	M16	10	5 / 10	14	39	22	21051161	0,010	50	-25 / 90 ºC
Black RAL 9005	M20	10	6 / 12	16	39	24	21051200	0,010	50	-25 / 90 ºC
Black RAL 9005	M20	10	10 / 14	18	43	27	21051201	0,010	50	-25 / 90 ºC
Black RAL 9005	M25	10	13 / 18	22	48	33	21051250	0,021	50	-25 / 90 ºC
Black RAL 9005	M32	10	18 / 25	30	51	42	21051320	0,040	25	-25 / 90 ºC
Black RAL 9005	M40	10	22 / 32	39	61	53	21051400	0,080	10	-25 / 90 ºC
Black RAL 9005	M50	18	32 / 38	45	71	60	21051500	0,103	5	-25 / 90 ºC
Black RAL 9005	M63	18	37 / 44	51	73	70	21051630	0,143	5	-25 / 90 ºC
Grey RAL 7001	PG 7	8	3 / 6.5	9	32	15	21060007	0,003	50	-25 / 90 ºC
Grey RAL 7001	PG 9	8	4 / 8	11	36	19	21060009	0,005	50	-25 / 90 ºC
Grey RAL 7001	PG11	8	5 / 10	14	37	22	21060011	0,008	50	-25 / 90 ºC
Grey RAL 7001	PG13	9	6 / 12	16	38	24	21060013	0,010	50	-25 / 90 ºC
Grey RAL 7001	PG16	9	10 / 14	18	42	27	21060016	0,013	50	-25 / 90 ºC
Grey RAL 7001	PG21	11	13 / 18	22	49	33	21060021	0,021	50	-25 / 90 ºC
Grey RAL 7001	PG29	11	18 / 25	30	52	42	21060029	0,037	25	-25 / 90 ºC
Grey RAL 7001	PG36	13	22 / 32	39	64	53	21060036	0,066	10	-25 / 90 ºC
Grey RAL 7001	PG42	13	30 / 38	45	66	60	21060042	0,081	5	-25 / 90 ºC
Grey RAL 7001	PG48	14	34 / 44	51	69	65	21060048	0,092	5	-25 / 90 ºC
Grey RAL 7001	M12	8	3 / 6.5	9	32	15	21061120	0,003	50	-25 / 90 ºC
Grey RAL 7001	M16	8	4 / 8	11	36	19	21061160	0,006	50	-25 / 90 ºC
Grey RAL 7001	M16	10	5 / 10	14	39	22	21061161	0,006	50	-25 / 90 ºC
Grey RAL 7001	M20	10	6 / 12	16	39	24	21061200	0,010	50	-25 / 90 ºC
Grey RAL 7001	M20	10	10 / 14	18	43	27	21061201	0,010	50	-25 / 90 ºC
Grey RAL 7001	M25	10	13 / 18	22	48	33	21061250	0,021	50	-25 / 90 ºC
Grey RAL 7001	M32	10	18 / 25	30	51	42	21061320	0,040	25	-25 / 90 ºC
Grey RAL 7001	M40	10	22 / 32	39	61	53	21061400	0,080	10	-25 / 90 ºC
Grey RAL 7001	M50	18	32 / 38	45	71	60	21061500	0,103	5	-25 / 90 ºC
Grey RAL 7001	M63	18	37 / 44	51	73	70	21061630	0,143	5	-25 / 90 ºC

Protection System

Any information included in this document is property of Pemsa®. It cannot be copied, total or partially, nor disclosed to third parties nor used without the explicit and written authorization by Pemsa®. These documents total or partially, can be subject to patent and/or be patent pending and therefore protected by intellectual and industrial property rights. Pemsa, Rejiband, Pemsaband, Inducanal, Rejitech, Megaband, Pemsaflex are registered trademarks property of "Pemsa Cable Management, S.A."

CU - Copper electroplated

PG - Pregalvanised

EZ - Electrogalvanised

BC - Electrogalvanised Bichromate

BK8 - High Resistance Coating

GC - Hot Dip Galvanising

INOX - Stainless Steel

PT - Polyester Paint

AL - Aluminum

LN - Brass or Nickel-plated brass

Insulating materials

PC+ABS - Halogen Free Polycarbonate + ABS

PVC - Polyvinyl Chloride

PP - Halogen Free Polypropylene

PA6 - Halogen Free Polyamide 6

PA12 - Halogen Free Polyamide 12

PU - Polyurethane

PE - Polyethylene

NBR - NBR rubber

PET - Thermoplastic Polyester

TPV - Thermoplastic

Any information included in this document is property of Pemsa®. It cannot be copied, total or partially, nor disclosed to third parties nor used without the explicit and written authorization by Pemsa®. These documents total or partially, can be subject to patent and/or be patent pending and therefore protected by intellectual and industrial property rights. Pemsa, Rejiband, Pemsaband, Inducanal, Rejitech, Megaband, Pemsaflex are registered trademarks property of "Pemsa Cable Management, S.A."