Pemsaband. Cable Tray

25/11/2026

Pemsaband One. Perforated Click System

Cable tray (Ref: 75224200)



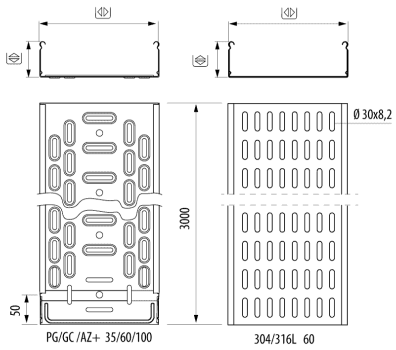

Description

Perforated and embossed sheet steel tray of 35, 60 and 100 mm height, in GC, PG, AZ+, INOX 304 and 316L Protection System with a safety edge. Of 100 mm height, Width 200 mm, With PG protection system. The Pemsaband® One Perforated tray is suitable for supporting and routing electrical cables of medium and light loads. Ease of assembly thanks to its Click system of fast coupling between lengths, saving on material and labour. There are a wide variety of sizes to choose from according to the needs of each installation.

Advantages

Wide variety of sizes, protection systems and accessories to adapt to the requirements of each electrical installation.

Profiled safety edge for cable protection. It also prevents possible cuts when handled by the installer.

Click system for the easy assembly and joining of straight lengths without the need for any other accessories.

The perforated and embossed base increases the transverse and longitudinal strength thus increasing the load capacity. It prevents fluid retention and achieves a lower unit weight.

UL Certified by the requirements of NFPA 70 and NEMA VE 1-2009. N Mark of Aenor according to IEC 61537 and CE Conformity to Directive 2014/35 /EU.

Applications

Support, management and distribution of cables in Electrical and/or telecommunications installations in: Civil Works, Tunnels, Car Parks, Public Buildings, Shopping Centres, Data Processing Centres, Infrastructures, Airports, Underground and Railway. Tertiary sector and industrial applications: Naval, Petrochemical, Textile, Chemical and Food. Indoor applications in the dry or in exterior atmospheres with wet environments according to the various protection systems.

Solutions

RENEWABLE ENERGIES SERVICE AND RETAIL FIRE RESISTANCE SOLUTION

Any information included in this document is property of Pemsa®. It cannot be copied, total or partially, nor disclosed to third parties nor used without the explicit and written authorization by Pemsa®. These documents total or partially, can be subject to patent and/or be patent pending and therefore protected by intellectual and industrial property rights. Pemsa, Rejiband, Pemsaband, Inducanal, Rejitech, Megaband, Pemsaflex are registered trademarks property of "Pemsa Cable Management, S.A."

Pemsaband One. Perforated Click System Cable tray (Ref: 75224200)

Product data

ETIM 10	EC000047	**u**	6
Huella de CO2. GWP A1-A3 (kg CO2 eq.)		**Material**	Steel with surface coating
Protection System	PG	**Impact Strength (J)**	20 J
Finish	PG3, Pregalvanised	**Section (mm2)**	19392
Resistance Class	Class 3	**IP**	IP23
Flange (mm)	100	**Working temperature range (°C)**	-50 / 150 °C
Width (mm)	200	**Fire resistance**	A1 No combustible
Length (m)	3		
kg/u	2,133		

Ⓢ Protection System

CU - Copper electroplated

PG - Pregalvanised

EZ - Electrogalvanised

BC - Electrogalvanised Bichromate

BK8 - High Resistance Coating

GC - Hot Dip Galvanising

INOX - Stainless Steel

PT - Polyester Paint

AL - Aluminum

LN - Brass or Nickel-plated brass

Ⓜ Insulating materials

PC+ABS - Halogen Free Polycarbonate + ABS

PVC - Polyvinyl Chloride

PP - Halogen Free Polypropylene

PA6 - Halogen Free Polyamide 6

PA12 - Halogen Free Polyamide 12

PU - Polyurethane

PE - Polyethylene

NBR - NBR rubber

PET - Thermoplastic Polyester

TPV - Thermoplastic

Any information included in this document is property of Pemsa®. It cannot be copied, total or partially, nor disclosed to third parties nor used without the explicit and written authorization by Pemsa®. These documents total or partially, can be subject to patent and/or be patent pending and therefore protected by intellectual and industrial property rights. Pemsa, Rejiband, Pemsaband, Inducanal, Rejitech, Megaband, Pemsaflex are registered trademarks property of "Pemsa Cable Management, S.A."

Pemsaband One. Perforated Click System

Cable tray (Ref: 75224200)

Load diagrams



Ensayos de carga CTA instalaciones horizontales

Valores obtenidos según la norma IEC 61537, edición 3, según ensayos vertical horizontal multi vano recogido en el punto 10.5.1 de dicha norma, con un coeficiente de seguridad del 170% y sin alcanzar en ningún caso el colapso.

Load Tests for SWL mounted in the horizontal plane

Values obtained in accordance with IEC 61537, edition 3, according to the horizontal vertical tests of multiple spans listed in point 10.5.1 of this standard, with a safety factor of 170% and without collapse in any case.

Essais de charge de travail admissible (CTA) pour les installations horizontales

Valeurs obtenues conformément à la norme CEI 61537, édition 3, selon les essais verticaux horizontaux à travées multiples énumérés au point 10.5.1 de la présente norme, avec un coefficient de sécurité de 170 % et sans jamais atteindre l'effondrement.

Ensaios de carga CTA em instalações horizontais

Valores obtidos de acordo com a norma IEC 61537, edição 3, segundo os ensaios vertical horizontal de vãos múltiplos enumerados no ponto 10.5.1 da presente norma, com um coeficiente de segurança de 170% e sem nunca atingir o colapso.

	60	100	150	200	300	400	500	600
	mm²							
35	-	3.122	4.822	6.522	9.922	13.322	-	-
60	3.122	5.572	8.522	11.472	17.372	23.272	29.172	35.072
100	-	9.492	-	19.392	29.292	39.192	49.092	58.992

PG **GC** — 35

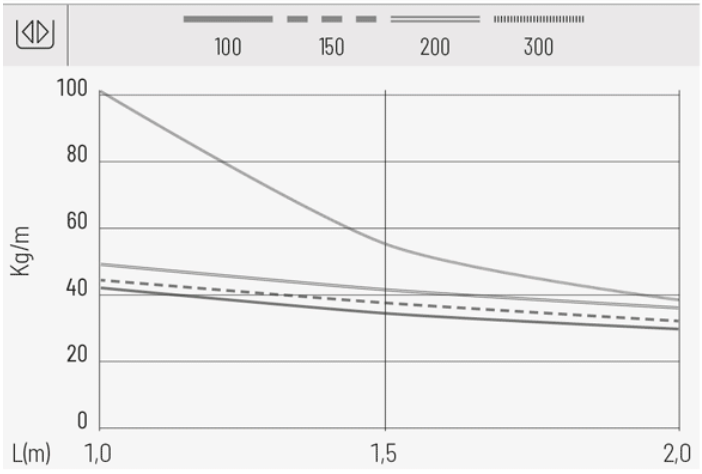

PG **GC** — 60

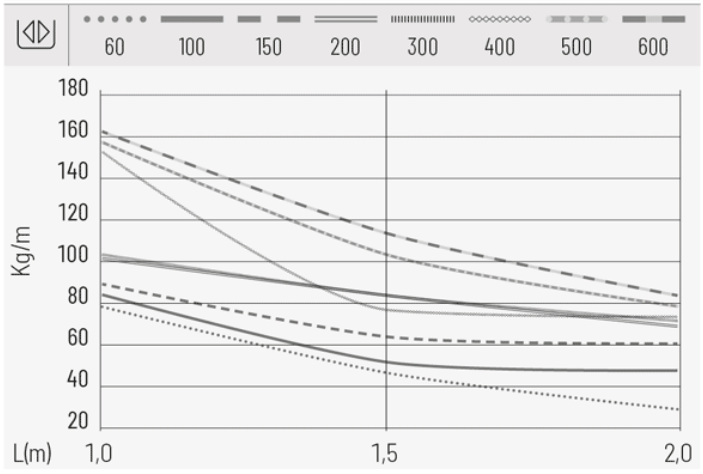

PG **GC** — 100

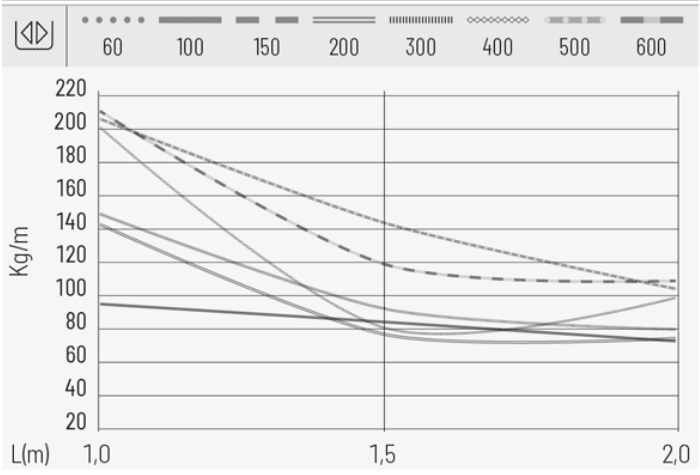

AZ+ — 60

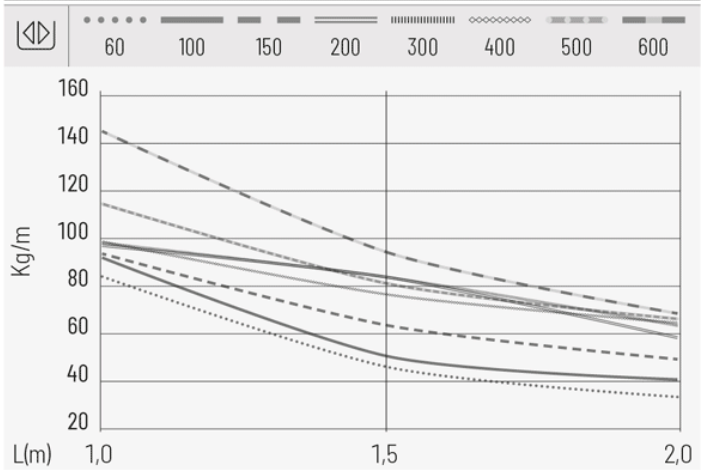

Any information included in this document is property of Pemsa®. It cannot be copied, total or partially, nor disclosed to third parties nor used without the explicit and written authorization by Pemsa®. These documents total or partially, can be subject to patent and/or be patent pending and therefore protected by intellectual and industrial property rights. Pemsa, Rejiband, Pemsaband, Inducanal, Rejitech, Megaband, Pemsaflex are registered trademarks property of "Pemsa Cable Management, S.A."

Pemsaband One. Perforated Click System

Cable tray (Ref: 75224200)

Ensayos de carga CTA instalaciones verticales en recorrido horizontal

Valores obtenidos según la norma IEC 61537, edición 3, según ensayos vertical horizontal multi vano recogido en el punto 10.5.1 de dicha norma, con un coeficiente de seguridad del 170% y sin alcanzar en ningún caso el colapso.

Load Tests for SWL mounted in the vertical plane running horizontally

Values obtained in accordance with IEC 61537, edition 3, according to the horizontal vertical tests of multiple spans listed in point 10.5.1 of this standard, with a safety factor of 170% and without collapse in any case.

Essais de charge de travail admissible (CTA) pour les installations verticales avec déplacement horizontal

Valeurs obtenues conformément à la norme CEI 61537, édition 3, selon les essais verticaux horizontaux à travées multiples énumérés au point 10.5.1 de la présente norme, avec un coefficient de sécurité de 170 % et sans jamais atteindre l'effondrement.

Ensaios de carga CTA instalações verticais em deslocações horizontais

Valores obtidos de acordo com a norma IEC 61537, edição 3, segundo os ensaios vertical horizontal de vãos múltiplos enumerados no ponto 10.5.1 do presente norma, com um coeficiente de segurança de 170% e sem nunca atingir o colapso.

	60	100	150	200	300	400	500	600
	mm²							
35	-	3.122	4.822	6.522	9.922	13.322	-	-
60	3.122	5.572	8.522	11.472	17.372	23.272	29.172	35.072
100	-	9.492	-	19.392	29.292	39.192	49.092	58.992

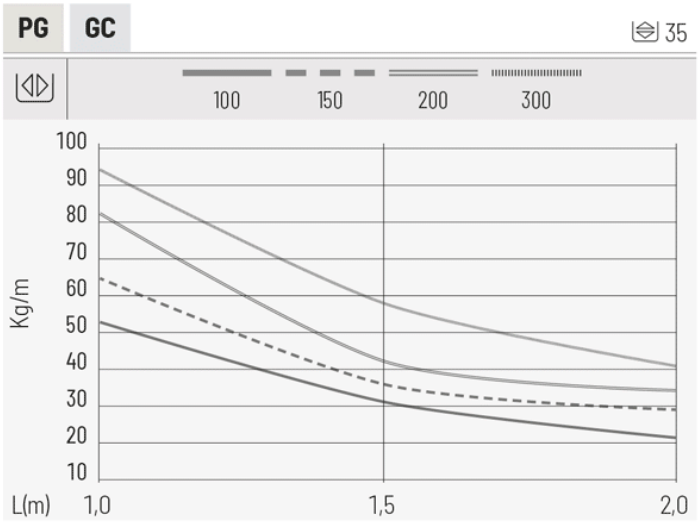

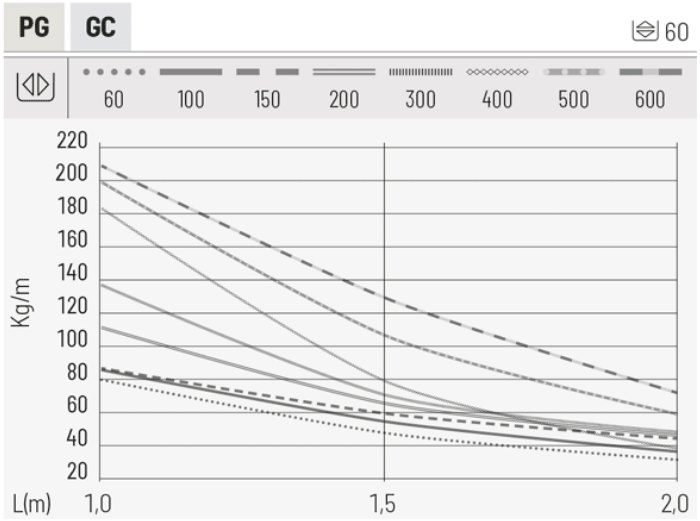

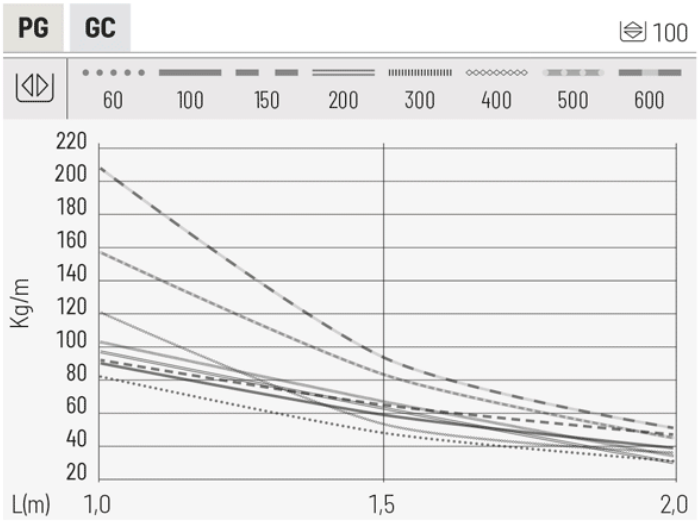

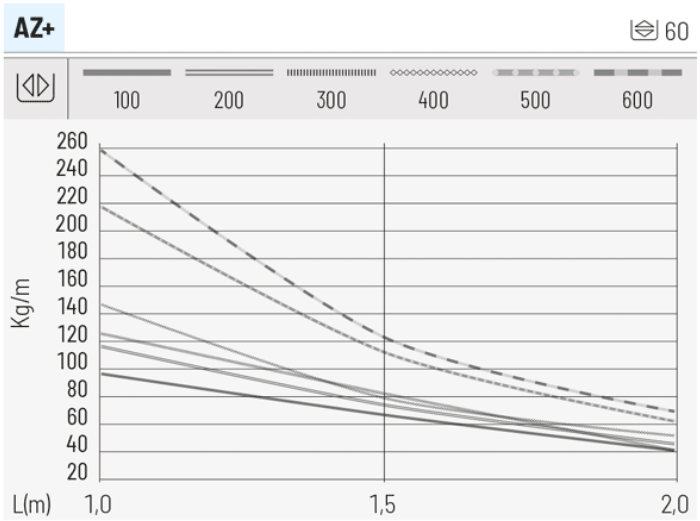

Product applications

Any information included in this document is property of Pemsa®. It cannot be copied, total or partially, nor disclosed to third parties nor used without the explicit and written authorization by Pemsa®. These documents total or partially, can be subject to patent and/or be patent pending and therefore protected by intellectual and industrial property rights. Pemsa, Rejiband, Pemsaband, Inducanal, Rejitech, Megaband, Pemsaflex are registered trademarks property of "Pemsa Cable Management, S.A."

Pemsaband One. Perforated Click System

Cable tray (Ref: 75224200)

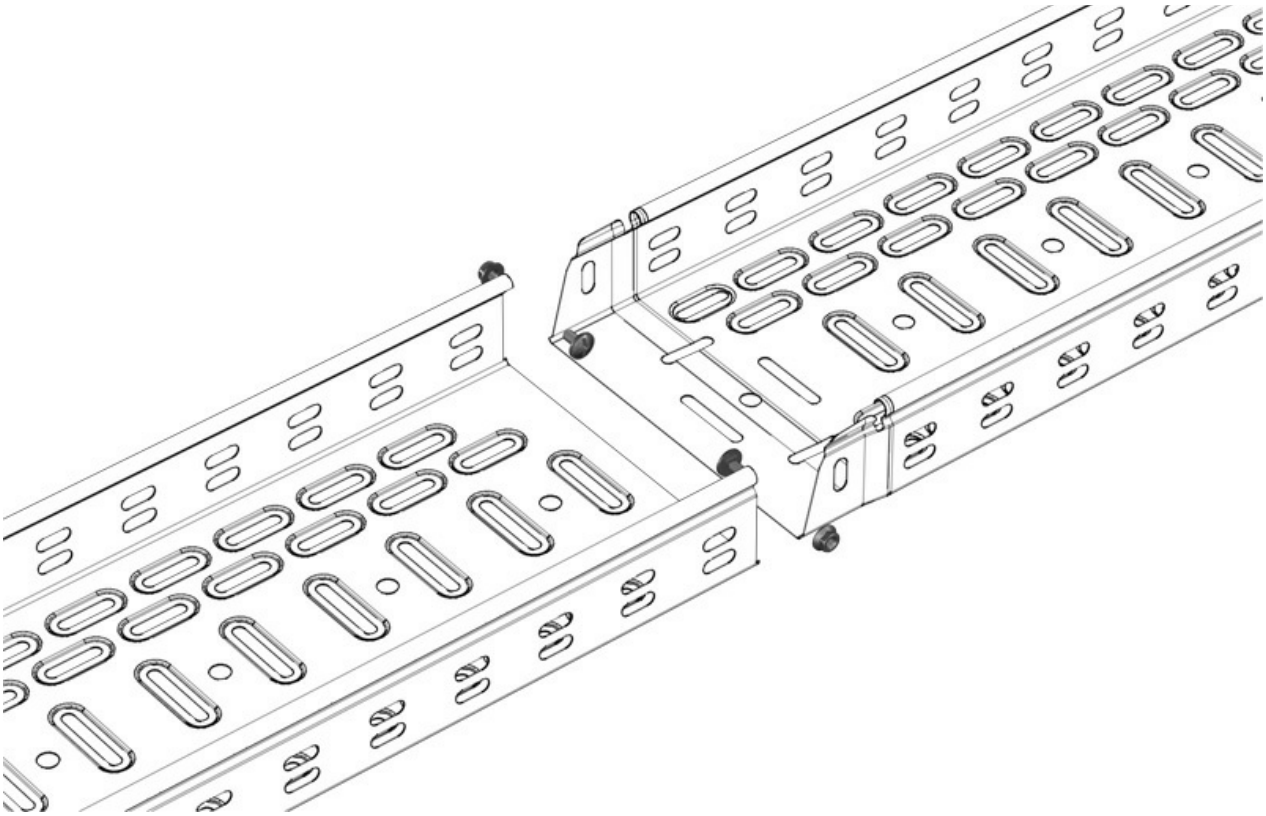

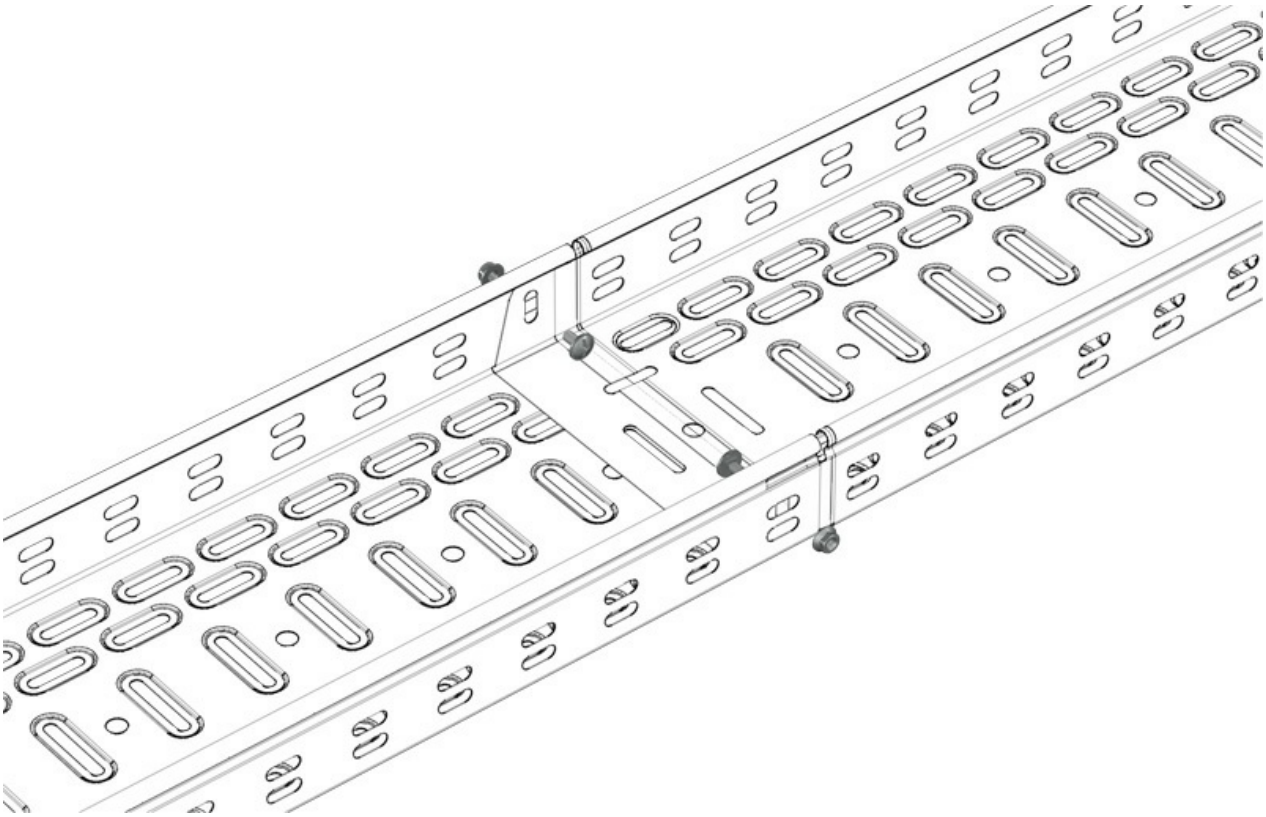

Any information included in this document is property of Pemsa®. It cannot be copied, total or partially, nor disclosed to third parties nor used without the explicit and written authorization by Pemsa®. These documents total or partially, can be subject to patent and/or be patent pending and therefore protected by intellectual and industrial property rights. Pemsa, Rejiband, Pemsaband, Inducanal, Rejitech, Megaband, Pemsaflex are registered trademarks property of "Pemsa Cable Management, S.A."

Pemsaband One. Perforated Click System

Cable tray (Ref: 75224200)

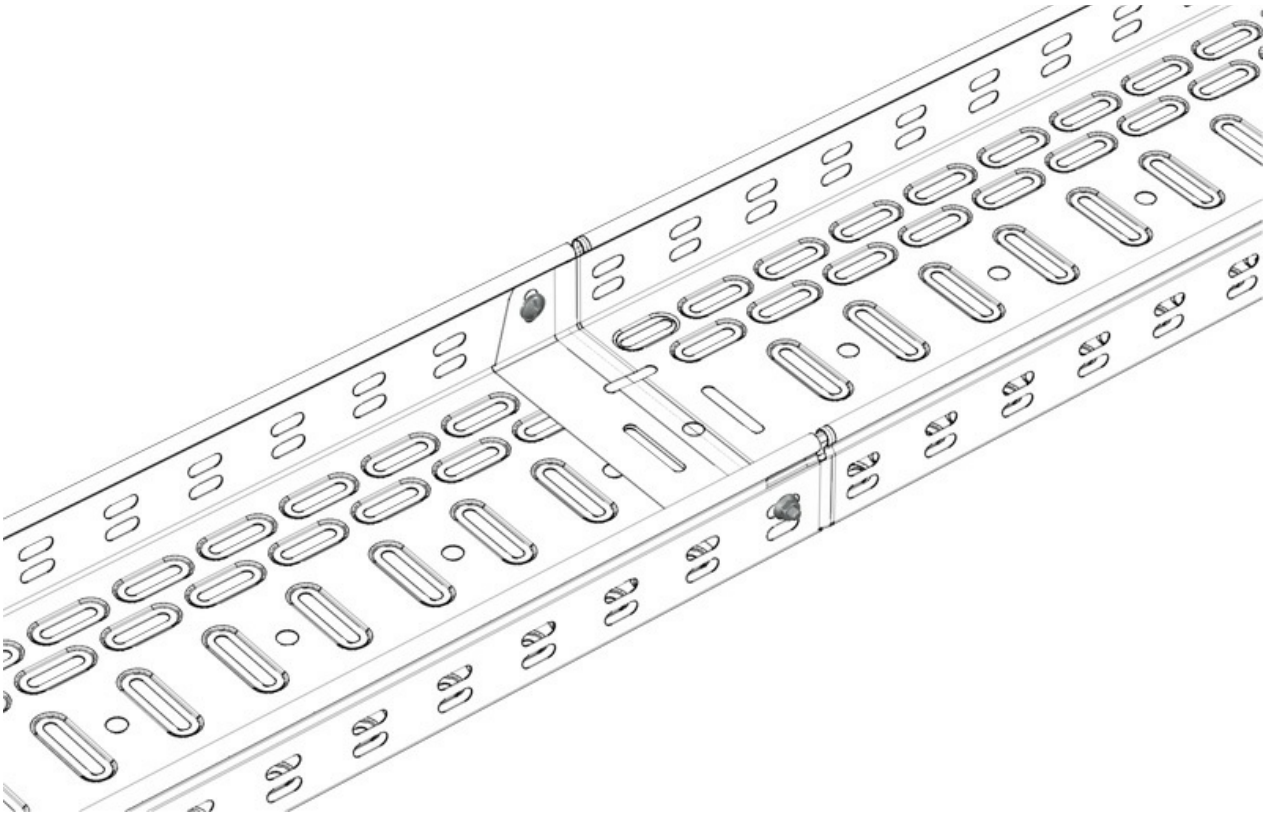

Any information included in this document is property of Pemsa®. It cannot be copied, total or partially, nor disclosed to third parties nor used without the explicit and written authorization by Pemsa®. These documents total or partially, can be subject to patent and/or be patent pending and therefore protected by intellectual and industrial property rights. Pemsa, Rejiband, Pemsaband, Inducanal, Rejitech, Megaband, Pemsaflex are registered trademarks property of "Pemsa Cable Management, S.A."