Pemsaband Speed Solid (Ref: 82004499)

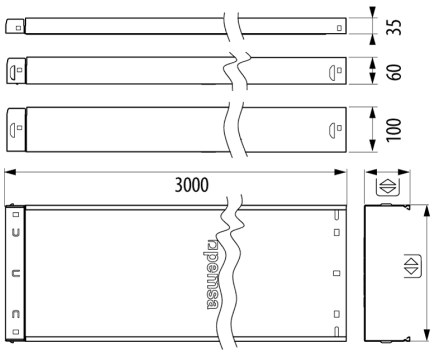

Description

Solid metal cable tray with a screwless snap-fit connect system, Available in heights of 35, 60, and 100 mm, with PG and AZ+ protection systems. New profile design and flat safety edge maximize contact with the cover. Of 60 mm height, Width 300 mm, With PG protection system. The Pemsaband® Speed solid cable tray is designed for supporting and managing electrical and telecommunications cables in medium and light loads. Its easy assembly, thanks to a screwless, snap-fit quick-connect system, saves on material and labor costs.

Advantages

Regulatory compliance: designed and developed in accordance with edition 3 of IEC 61537, Directive 2014/35/EU (CE marking) and UKCA marking, ensuring safety and reliability in electrical installations.

New profiled and flat safety edge design, created to offer maximum protection for your cables and reinforce the cable tray structure. With an 80% increase in the contact surface between the cable tray and the cover, it ensures optimal electrical continuity, meeting the standards of IEC 61357 Edition 3.

Innovative design with a renewed and distinctive aesthetic, our cable trays offer a modern and attractive look, in addition to meeting the highest quality and safety standards.

Wide variety of sizes: heights 35, 60 and 100 mm, and widths from 60 to 600 mm, PG and AZ+ protection systems, and a complete range of accessories from the Pemsaband® family that allows adaptation to the requirements of each electrical installation.

Revolutionary screwless snap-fit quick-connect system, easy to install in just one step, and requires no additional tools or accessories. This innovative solution streamlines your installation process, saving you money on both materials and labor. Say goodbye to hassles and save time with our efficient and practical connection system!

Applications

A system designed for the routing, support, transport and distribution of cables in electrical and/or telecommunications installations. It is applicable to, among others, the following areas: - Buildings, including public buildings, shopping centres, and Data Centres (DCs) . - Civil works and infrastructure, such as tunnels, car parks, airports and railways and underground/metro lines. - The service and industrial sectors, being suitable for applications in the manufacturing, chemical and food industries. The system is suitable for rapid installation indoors in controlled atmospheres, as well as in outdoor installations or humid environments, selecting the appropriate protection and finishing system in each case based on the environmental and service conditions.

Solutions

Any information included in this document is property of Pemsa®. It cannot be copied, total or partially, nor disclosed to third parties nor used without the explicit and written authorization by Pemsa®. These documents total or partially, can be subject to patent and/or be patent pending and therefore protected by intellectual and industrial property rights. Pemsa, Rejiband, Pemsaband, Inducanal, Rejitech, Megaband, Pemsaflex are registered trademarks property of "Pemsa Cable Management, S.A."

Pemsaband Speed Solid (Ref: 82004499)

Product data

ETIM 10	EC000047	**u**	6
Huella de CO2. GWP A1-A3 (kg CO2 eq.)		**Material**	Steel with surface coating
Protection System	PG	**Impact Strength (J)**	20 J
Finish	PG3, Pregalvanised	**Section (mm2)**	18000
Resistance Class	Class 3	**IP**	IP44
Flange (mm)	60	**Working temperature range (°C)**	-50 / 150 °C
Width (mm)	300	**Fire resistance**	A1 No combustible
Length (m)	3		
kg/u	2,602		

Ⓢ Protection System

CU - Copper electroplated

PG - Pregalvanised

EZ - Electrogalvanised

BC - Electrogalvanised Bichromate

BK8 - High Resistance Coating

GC - Hot Dip Galvanising

INOX - Stainless Steel

PT - Polyester Paint

AL - Aluminum

LN - Brass or Nickel-plated brass

Ⓜ Insulating materials

PC+ABS - Halogen Free Polycarbonate + ABS

PVC - Polyvinyl Chloride

PP - Halogen Free Polypropylene

PA6 - Halogen Free Polyamide 6

PA12 - Halogen Free Polyamide 12

PU - Polyurethane

PE - Polyethylene

NBR - NBR rubber

PET - Thermoplastic Polyester

TPV - Thermoplastic

Any information included in this document is property of Pemsa®. It cannot be copied, total or partially, nor disclosed to third parties nor used without the explicit and written authorization by Pemsa®. These documents total or partially, can be subject to patent and/or be patent pending and therefore protected by intellectual and industrial property rights. Pemsa, Rejiband, Pemsaband, Inducanal, Rejitech, Megaband, Pemsaflex are registered trademarks property of "Pemsa Cable Management, S.A."

Load diagrams

Ensayos de carga CTA instalaciones verticales en desarrollo horizontal

Valores obtenidos según la norma IEC 61537, edición 3, según ensayo horizontal multi vano recogido en el punto 10.5.1 de dicha norma, con un coeficiente de seguridad del 170% y sin alcanzar en ningún caso el colapso.

Load Tests for SWL installed in vertical horizontal way

Values obtained in accordance with IEC 61537, edition 3, according to the horizontal tests of multiple spans listed in point 10.5.1 of this standard, with a safety factor of 170% and without collapse in any case.

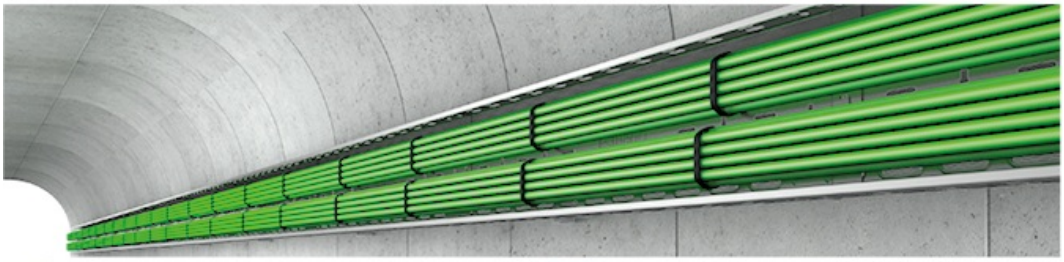

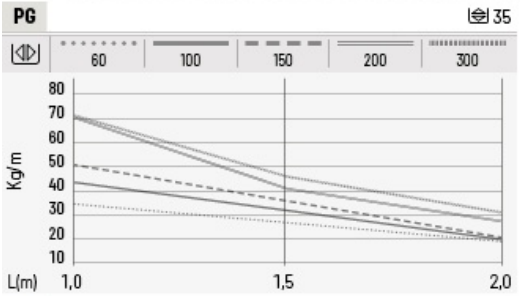

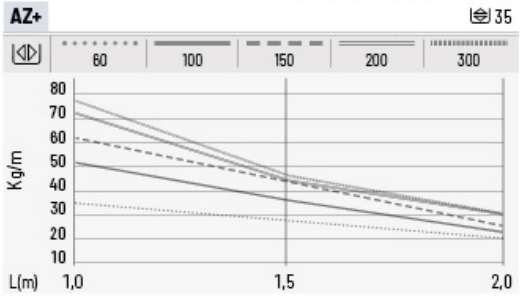

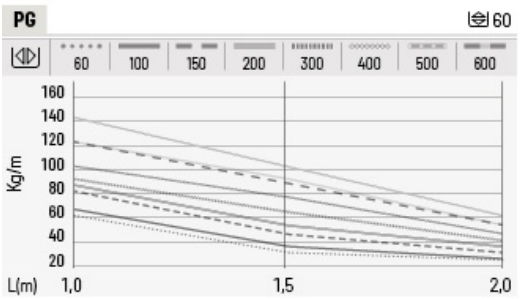

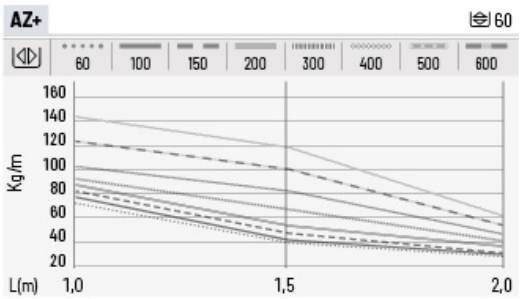

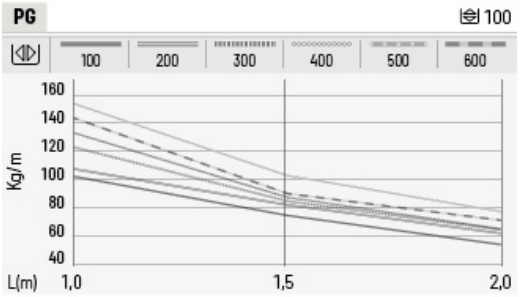

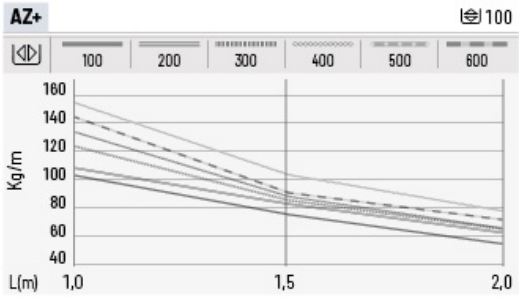

Las cargas expresadas en la tabla reflejan las **cargas máximas de trabajo admisible** (CTA) y que corresponden a la capacidad máxima de llenado. En una instalación en vertical - horizontal, para cantidad máxima de cables a incluir en una bandeja depende del agrupamiento y las opciones de embridado y fijación de los cables para que la instalación sea segura.

*The loads shown in the table reflect the **maximum allowable working loads** (MWL) and correspond to the maximum filling capacity. In a vertical-to-horizontal installation, the maximum number of cables to be included in a tray depends on how the cables are bunched and the tying and securing options used to ensure a safe installation.*

Any information included in this document is property of Pemsa®. It cannot be copied, total or partially, nor disclosed to third parties nor used without the explicit and written authorization by Pemsa®. These documents total or partially, can be subject to patent and/or be patent pending and therefore protected by intellectual and industrial property rights. Pemsa, Rejiband, Pemsaband, Inducanal, Rejitech, Megaband, Pemsaflex are registered trademarks property of "Pemsa Cable Management, S.A."

Pemsaband Speed Solid (Ref: 82004499)

Ensayos de carga CTA instalaciones horizontales

Valores obtenidos según la norma IEC 61537, edición 3, según ensayo horizontal multi vano recogido en el punto 10.3.4 de dicha norma, con un coeficiente de seguridad del 170% y sin alcanzar en ningún caso el colapso.

Load Tests for SWL installed in the horizontal way

Values obtained in accordance with IEC 61537, edition 3, according to the horizontal tests of multiple spans listed in point 10.3.4 of this standard, with a safety factor of 170% and without collapse in any case.

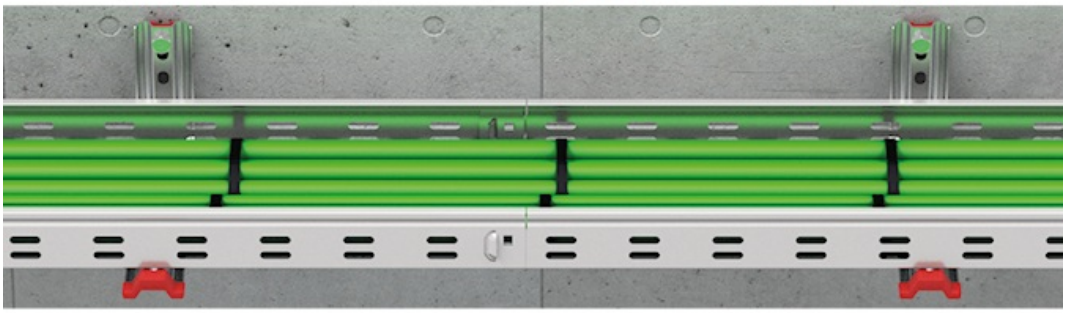

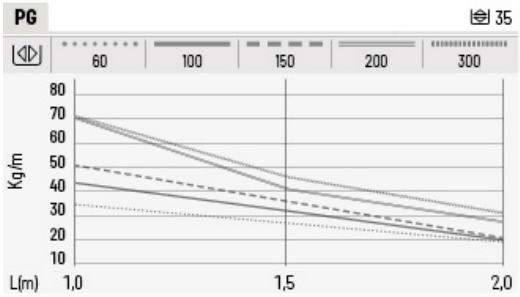

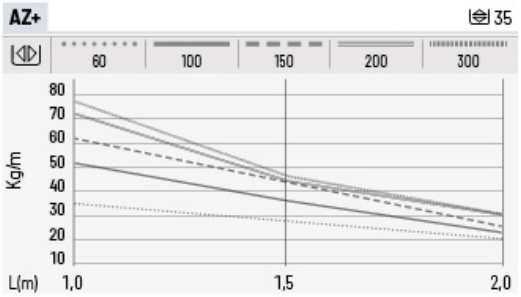

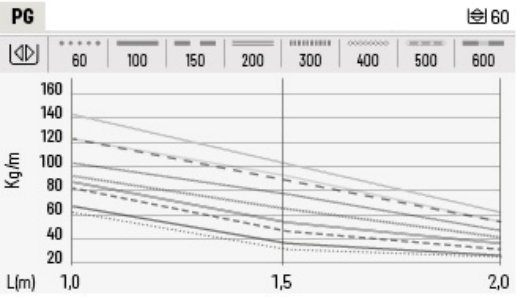

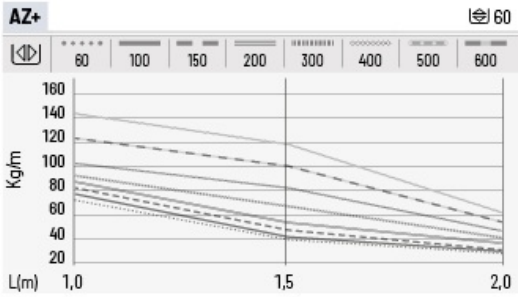

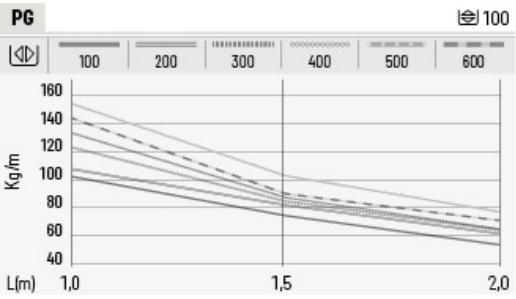

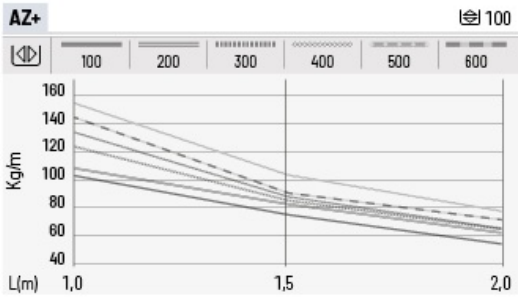

Any information included in this document is property of Pemsa®. It cannot be copied, total or partially, nor disclosed to third parties nor used without the explicit and written authorization by Pemsa®. These documents total or partially, can be subject to patent and/or be patent pending and therefore protected by intellectual and industrial property rights. Pemsa, Rejiband, Pemsaband, Inducanal, Rejitech, Megaband, Pemsaflex are registered trademarks property of "Pemsa Cable Management, S.A."

Pemsaband Speed Solid (Ref: 82004499)

Ensayos de carga CTA instalaciones verticales en desarrollo vertical

Valores obtenidos según la norma IEC 61537, edición 3, según ensayo vertical - vertical multi vano (V-V) recogido en el punto 10.6 de dicha norma, con un coeficiente de seguridad del 170% y sin alcanzar en ningún caso el colapso.

SWL load tests for vertical installations in vertical development.

Values obtained in accordance with IEC 61537, edition 3, according to the vertical - vertical multi-span (V-V) tests listed in point 10.6 of this standard, with a safety factor of 170% and without reaching collapse in any case.

		PG	AZ+	CTA/SWL V-V kg/m (1 m)
35	60	82004471	82004509	35
	100	82004472	82004510	43
	150	82004473	82004511	50
	200	82004474	82004512	71
	300	82004475	82004513	70
60	60	82004476	82004514	60
	100	82004477	82004515	66
	150	82004478	82004516	82
	200	82004479	82004517	87
	300	82004480	82004518	92
	400	82004481	82004519	102
	500	82004482	82004520	122
	600	82004483	82004521	143
100	100	82004484	82004522	102
	200	82004485	82004523	107
	300	82004486	82004524	122
	400	82004487	82004525	133
	500	82004488	82004526	143
	600	82004489	82004527	153

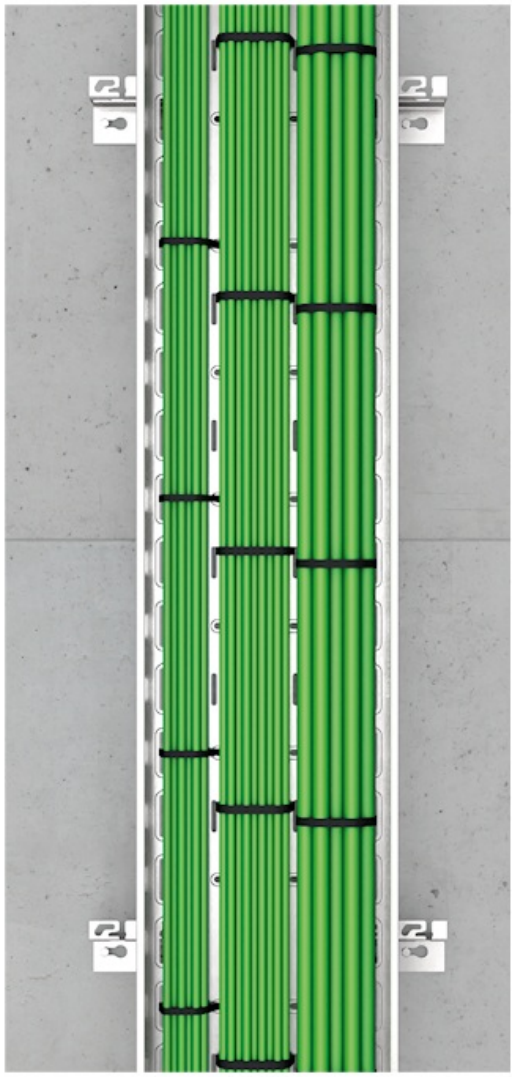

Las cargas expresadas en la tabla reflejan las **cargas máximas de trabajo admisible** (CTA) y que corresponden a la capacidad máxima de llenado. En una instalación en vertical - vertical, para cantidad máxima de cables a incluir en una bandeja depende del agrupamiento y las opciones de embridado y fijación de los cables para que la instalación sea segura.

*The loads shown in the table represent the **maximum allowable working loads** (SWL) and correspond to the maximum filling capacity. In a vertical-to-vertical installation, the maximum number of cables to be accomodated in a cable how tray depends on the cables are bunched and the tying and securing options used to ensure a safe installation.*

Product applications

Any information included in this document is property of Pemsa®. It cannot be copied, total or partially, nor disclosed to third parties nor used without the explicit and written authorization by Pemsa®. These documents total or partially, can be subject to patent and/or be patent pending and therefore protected by intellectual and industrial property rights. Pemsa, Rejiband, Pemsaband, Inducanal, Rejitech, Megaband, Pemsaflex are registered trademarks property of "Pemsa Cable Management, S.A."

Pemsaband Speed Solid (Ref: 82004499)

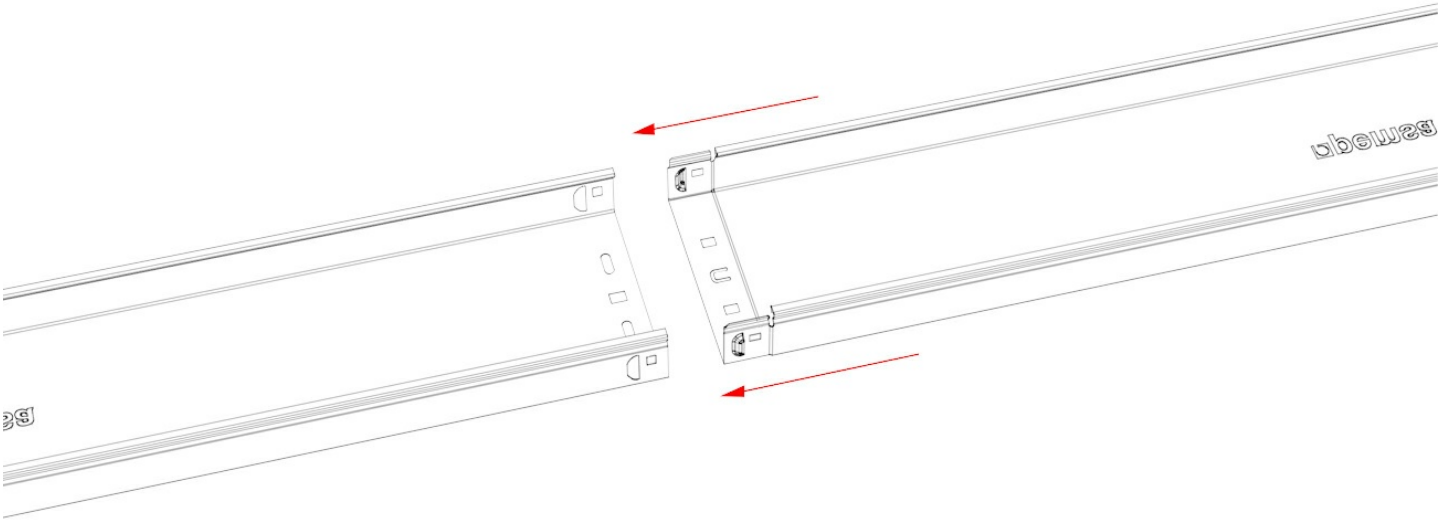

Any information included in this document is property of Pemsa®. It cannot be copied, total or partially, nor disclosed to third parties nor used without the explicit and written authorization by Pemsa®. These documents total or partially, can be subject to patent and/or be patent pending and therefore protected by intellectual and industrial property rights. Pemsa, Rejiband, Pemsaband, Inducanal, Rejitech, Megaband, Pemsaflex are registered trademarks property of "Pemsa Cable Management, S.A."

Pemsaband Speed Solid (Ref: 82004499)

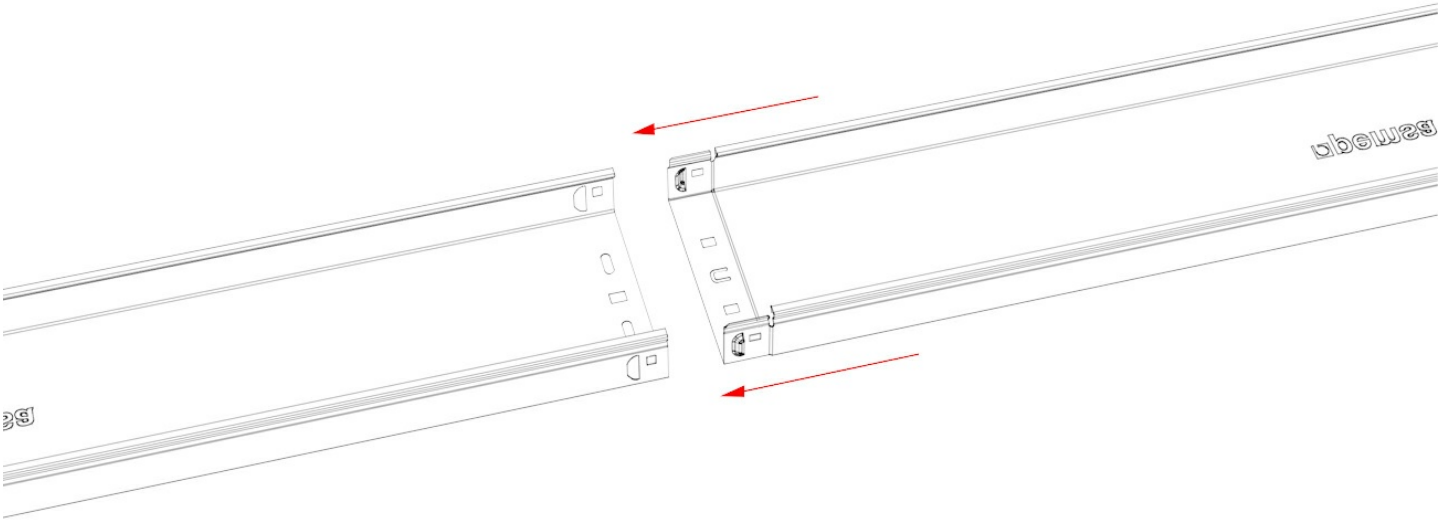

Any information included in this document is property of Pemsa®. It cannot be copied, total or partially, nor disclosed to third parties nor used without the explicit and written authorization by Pemsa®. These documents total or partially, can be subject to patent and/or be patent pending and therefore protected by intellectual and industrial property rights. Pemsa, Rejiband, Pemsaband, Inducanal, Rejitech, Megaband, Pemsaflex are registered trademarks property of "Pemsa Cable Management, S.A."