AB 90° Connector

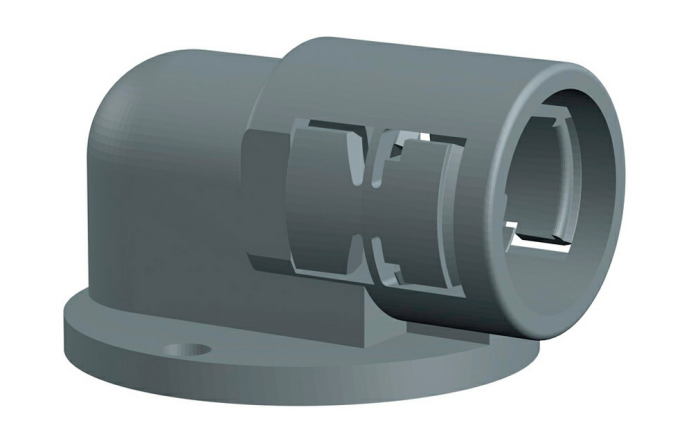

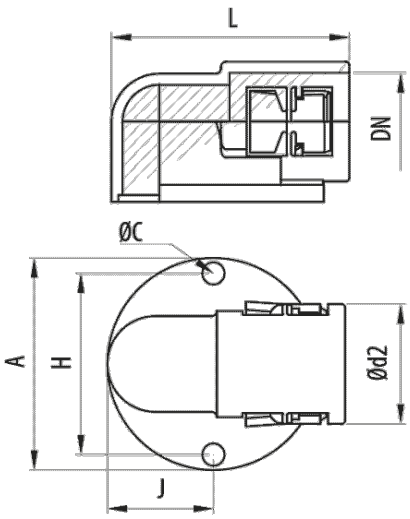

Description

90° angle connector made from self-extinguishing polyamide 6 in RAL 7011 grey or RAL 9005 black, metric and PG thread, halogen-free, flame retardant and an IP54 protection rating. The AB 90 connector is suitable for the installation of Pemsaflex® LG-PA, ST-PA, RF-PA, RB-PA and RB-PU conduits where it is necessary to create a 90° angle in small spaces.

Advantages

Manufactured in polyamide 6. Self-extinguishing, halogen-free according to UNE/EN 60754-2 y UNE/EN 60754-1 and flame-retardant.

Click connection system that allows easy and fast coupling to the conduit.

Suitable for conduit assemblies creating 90° angles in tight spaces. It has a fixing base with four holes.

Working temperature: -25°C to + 105°C. Degree of protection IP54 according to classification EN60529.

UL and CSA certification. CE conformance with the 2014/35 directive and the IEC 61386 standard. Halogen-free according to EN 50267-2-1 standard. In accordance with standard EN 60204-1 (machine safety).

Applications

Suitable for the connection of Pemsaflex®, LG-PA, ST-PA, RF-PA, RB-PA and RB-PU conduits for the protection of wiring and conductors in electrical installations of machines, tools, industrial equipment, robots , vehicles and special facilities.

Solutions

Any information included in this document is property of Pemsa®. It cannot be copied, total or partially, nor disclosed to third parties nor used without the explicit and written authorization by Pemsa®. These documents total or partially, can be subject to patent and/or be patent pending and therefore protected by intellectual and industrial property rights. Pemsa, Rejiband, Pemsaband, Inducanal, Rejitech, Megaband, Pemsaflex are registered trademarks property of "Pemsa Cable Management, S.A."

AB 90° Connector

Main technical characteristics

Colour Grey RAL 7011, Black RAL 9005

DN NW17, NW23, NW29, NW36, NW48

Polyamide 6

IP54

-25 / 105 °C

LIBRE DE HALÓGENOS,NO PROPAGADOR DE LA LLAMA

ETIM 10
EC001176

Product data

Colour	DN	Ød2	L(mm)	A(mm)	B(mm)	C(mm)	H(mm)	J(mm)	Ref	kg/u	u
Grey RAL 7011	NW17	27	51	45		5.5	35.5	22.5	31050400	0,016	30
Grey RAL 7011	NW23	35	69.5	62		6.5	53	31	31050500	0,033	30
Grey RAL 7011	NW29	41.8	78	67	36	6.5	54	22	31050600	0,049	20
Grey RAL 7011	NW36	51	103	85	30	6.5	73	29	31050700	0,080	10
Grey RAL 7011	NW48	63.8	119.5	88	30	6.5	72	44	31050800	0,127	10
Black RAL 9005	NW17	27	51	45		5.5	35.5	22.5	32050400	0,016	30
Black RAL 9005	NW23	35	69.5	62		6.5	53	31	32050500	0,033	30
Black RAL 9005	NW29	41.8	78	67	36	6.5	54	22	32050600	0,049	20
Black RAL 9005	NW36	51	103	85	30	6.5	73	29	32050700	0,080	10
Black RAL 9005	NW48	63.8	119.5	88	30	6.5	72	44	32050800	0,127	10

Protection System

CU - Copper electroplated

PG - Pregalvanised

EZ - Electrogalvanised

BC - Electrogalvanised Bichromate

BK8 - High Resistance Coating

GC - Hot Dip Galvanising

INOX - Stainless Steel

PT - Polyester Paint

AL - Aluminum

LN - Brass or Nickel-plated brass

Insulating materials

PC+ABS - Halogen Free Polycarbonate + ABS

PVC - Polyvinyl Chloride

PP - Halogen Free Polypropylene

PA6 - Halogen Free Polyamide 6

PA12 - Halogen Free Polyamide 12

PU - Polyurethane

PE - Polyethylene

NBR - NBR rubber

PET - Thermoplastic Polyester

TPV - Thermoplastic

Any information included in this document is property of Pemsa®. It cannot be copied, total or partially, nor disclosed to third parties nor used without the explicit and written authorization by Pemsa®. These documents total or partially, can be subject to patent and/or be patent pending and therefore protected by intellectual and industrial property rights. Pemsa, Rejiband, Pemsaband, Inducanal, Rejitech, Megaband, Pemsaflex are registered trademarks property of "Pemsa Cable Management, S.A."