Straight Connector (Ref: 33050052)



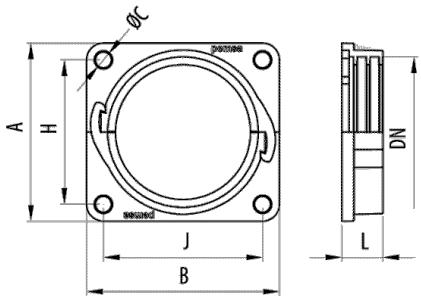

Description

Straight connector with surface fixing ring made of self-extinguishing polyamide 6, halogen-free in grey RAL 7011 and black RAL 9005. Available in various diameters. Formed by two pieces and assembly is with the click system without the need for screws. It allows the rotation, but not any axial movement. Suitable for large diameter Macroflex® conduits.

Advantages

CE conformity to the 2014/35 directive and the IEC 61386 standard.

It has a fixing ring with four holes for attaching the conduit to a flat surface.

Manufactured in polyamide 6. Self-extinguishing, halogen-free according to UNE/EN 60754-2 y UNE/EN 60754-1 and flame-retardant.

Formed by two pieces and assembly with click system without the need for screws. It allows the rotation, but not any axial movement.

Working temperature: -25°C to + 105°C. Degree of protection IP54 according to classification EN60529.

Applications

Suitable for fixing large diameter Pemsaflex® and Macroflex® conduits for the protection of wiring and conductors in electrical installations of machines, tools, industrial equipment, robots, vehicles and special installations.

Solutions

Any information included in this document is property of Pemsa®. It cannot be copied, total or partially, nor disclosed to third parties nor used without the explicit and written authorization by Pemsa®. These documents total or partially, can be subject to patent and/or be patent pending and therefore protected by intellectual and industrial property rights. Pemsa, Rejiband, Pemsaband, Inducanal, Rejitech, Megaband, Pemsaflex are registered trademarks property of "Pemsa Cable Management, S.A."

Straight Connector (Ref: 33050052)

Product data

ETIM 10	EC001176
Huella de CO2. GWP A1-A3 (kg CO2 eq.)	
Colour	Black RAL 9005
DN	NW52
L (mm)	17
A (mm)	74
B (mm)	77
Ø C (mm)	6.5
H (mm)	60

J (mm)	66
kg/u	0,023
u	10
Material	Polyamide 6
IP	IP54
Working temperature range (°C)	-25 / 105 ºC
Fire resistance	LIBRE DE HALÓGENOS,NO PROPAGADOR DE LA LLAMA

Ⓢ Protection System

CU - Copper electroplated

PG - Pregalvanised

EZ - Electrogalvanised

BC - Electrogalvanised Bichromate

BK8 - High Resistance Coating

GC - Hot Dip Galvanising

INOX - Stainless Steel

PT - Polyester Paint

AL - Aluminum

LN - Brass or Nickel-plated brass

Ⓜ Insulating materials

PC+ABS - Halogen Free Polycarbonate + ABS

PVC - Polyvinyl Chloride

PP - Halogen Free Polypropylene

PA6 - Halogen Free Polyamide 6

PA12 - Halogen Free Polyamide 12

PU - Polyurethane

PE - Polyethylene

NBR - NBR rubber

PET - Thermoplastic Polyester

TPV - Thermoplastic

Any information included in this document is property of Pemsa®. It cannot be copied, total or partially, nor disclosed to third parties nor used without the explicit and written authorization by Pemsa®. These documents total or partially, can be subject to patent and/or be patent pending and therefore protected by intellectual and industrial property rights. Pemsa, Rejiband, Pemsaband, Inducanal, Rejitech, Megaband, Pemsaflex are registered trademarks property of "Pemsa Cable Management, S.A."