3C Strut 40x30x1.5

Description

40x30mm rail with a thickness of 1.5mm for medium loads in installations of cable trays, electrical conduits and other installations of heating pipes, A/C, fire protection systems, etc. It has perforations on all 3 sides, increasing the possibilities of connecting supports and other items. Made of steel, available in various protection systems.

Advantages

Together with the 3C Mounting Plate offering the opportunity to regulate the connection angle of the system, adapting to arches of tunnels, galleries and sloping walls

Quick installation system. Thanks to the 3 side perforations allow a fast connection and screwing on the 3C Mounting Plate using M8x65 hexagonal screw.

Versatile installation system. We can connect different elements such as the 3C Mounting Plate for ceiling connection or as a lateral support for the wall, installing it laterally to the rail and increasing the stability and the load values of the set.

CE conformity in accordance to the low voltage directive 2014 /35 /UE and the international product standard IEC 61537

Available in PG and GC Protection Systems

Applications

Soportación de bandejas portacables, (rejiband®, pemsaband®, megaband®, entre otras), en instalaciones a techo en Túneles, Galerías de servicio, Edificios o instalaciones en entornos industriales.

Solutions

Any information included in this document is property of Pemsa®. It cannot be copied, total or partially, nor disclosed to third parties nor used without the explicit and written authorization by Pemsa®. These documents total or partially, can be subject to patent and/or be patent pending and therefore protected by intellectual and industrial property rights. Pemsa, Rejiband, Pemsaband, Inducanal, Rejitech, Megaband, Pemsaflex are registered trademarks property of "Pemsa Cable Management, S.A."

3C Strut 40x30x1.5

Main technical characteristics

30	Steel with surface coating	e(mm) 1.5	-50 / 150 °C	A1 No combustible	ETIM

Product data

PG	Class 3	0.5	81000101	0.518	1
PG	Class 3	1	81000105	1.030	1
PG	Class 3	3	81000107	1.050	3
GC	Class 6	0.5	82003164	0.518	1
GC	Class 6	1	82003166	1.030	1
GC	Class 6	3	82003168	1.050	3

Protection System

CU - Copper electroplated

PG - Pregalvanised

EZ - Electrogalvanised

BC - Electrogalvanised Bichromate

BK8 - High Resistance Coating

GC - Hot Dip Galvanising

INOX - Stainless Steel

PT - Polyester Paint

AL - Aluminum

LN - Brass or Nickel-plated brass

Insulating materials

PC+ABS - Halogen Free Polycarbonate + ABS

PVC - Polyvinyl Chloride

PP - Halogen Free Polypropylene

PA6 - Halogen Free Polyamide 6

PA12 - Halogen Free Polyamide 12

PU - Polyurethane

PE - Polyethylene

NBR - NBR rubber

PET - Thermoplastic Polyester

TPV - Thermoplastic

Any information included in this document is property of Pemsa®. It cannot be copied, total or partially, nor disclosed to third parties nor used without the explicit and written authorization by Pemsa®. These documents total or partially, can be subject to patent and/or be patent pending and therefore protected by intellectual and industrial property rights. Pemsa, Rejiband, Pemsaband, Inducanal, Rejitech, Megaband, Pemsaflex are registered trademarks property of "Pemsa Cable Management, S.A."

3C Strut 40x30x1.5

Product applications

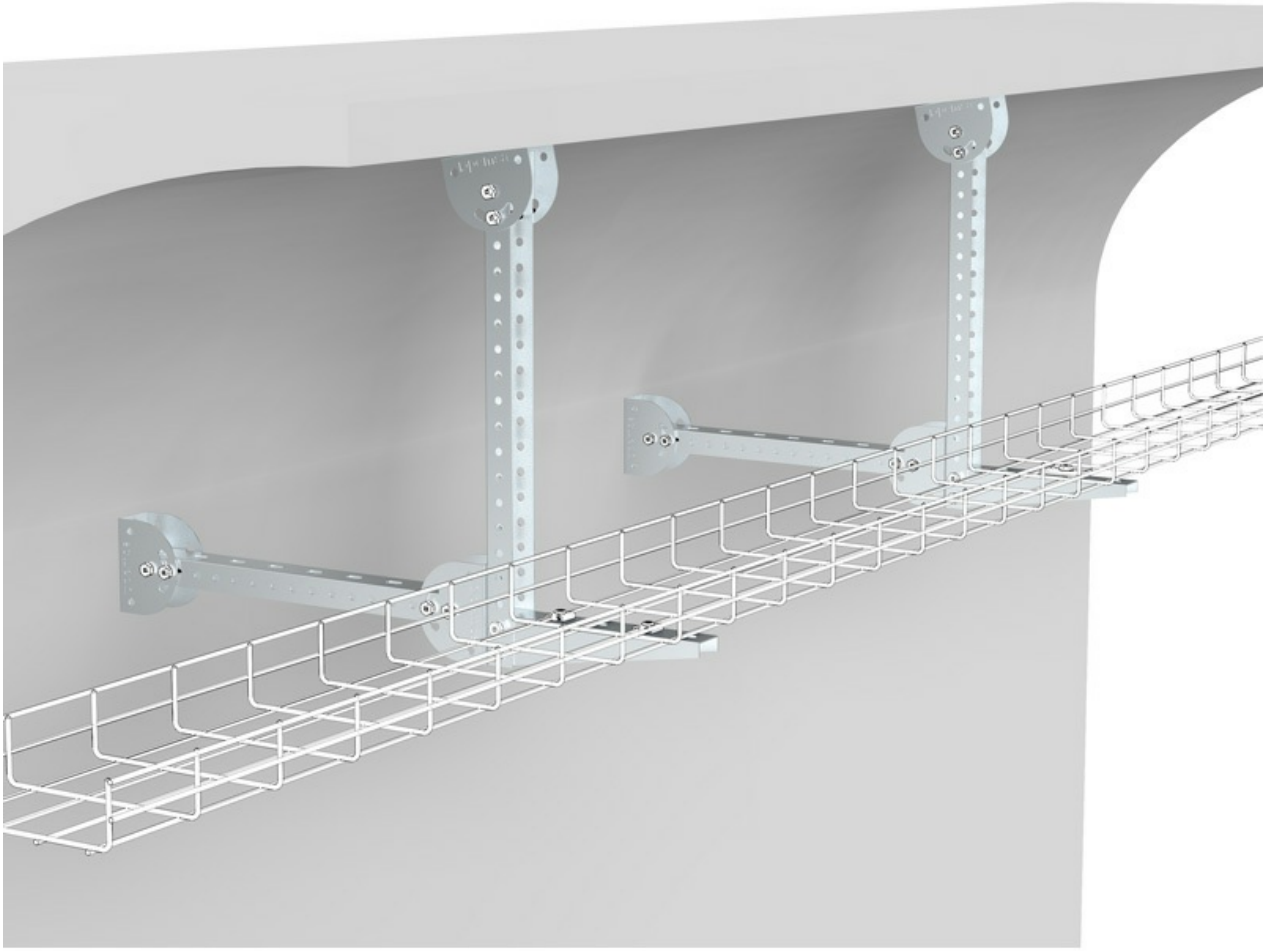

Any information included in this document is property of Pemsa®. It cannot be copied, total or partially, nor disclosed to third parties nor used without the explicit and written authorization by Pemsa®. These documents total or partially, can be subject to patent and/or be patent pending and therefore protected by intellectual and industrial property rights. Pemsa, Rejiband, Pemsaband, Inducanal, Rejitech, Megaband, Pemsaflex are registered trademarks property of "Pemsa Cable Management, S.A."

3C Strut 40x30x1.5

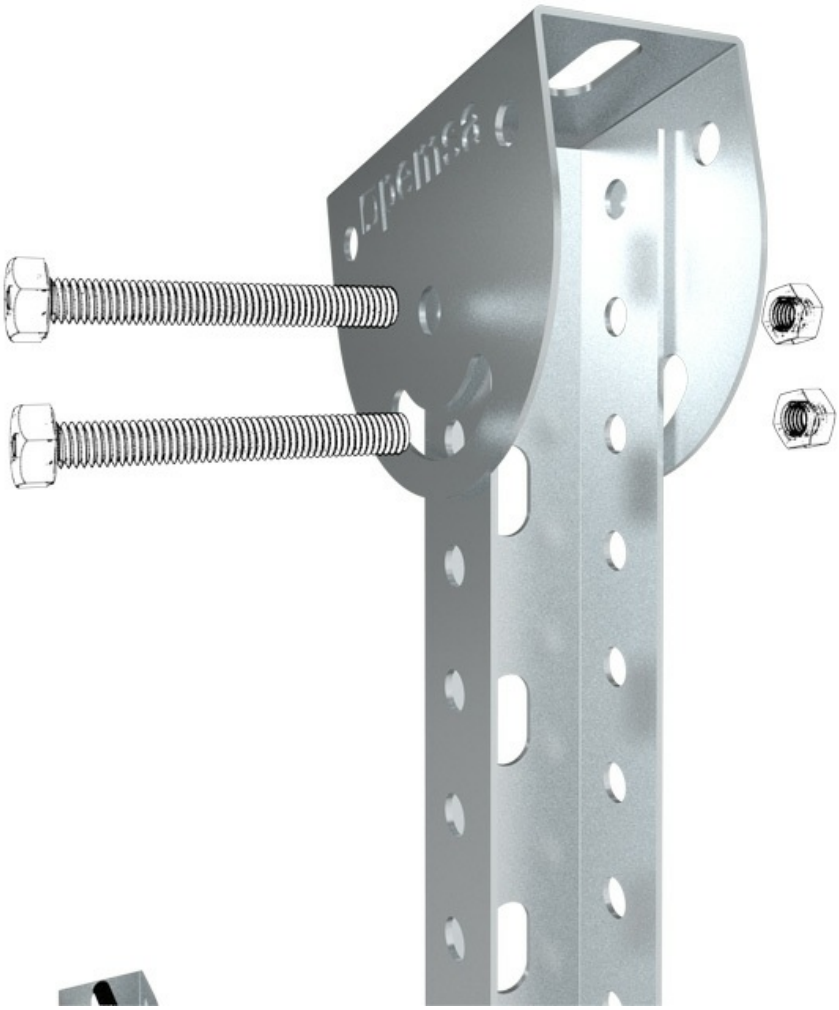

Any information included in this document is property of Pemsa®. It cannot be copied, total or partially, nor disclosed to third parties nor used without the explicit and written authorization by Pemsa®. These documents total or partially, can be subject to patent and/or be patent pending and therefore protected by intellectual and industrial property rights. Pemsa, Rejiband, Pemsaband, Inducanal, Rejitech, Megaband, Pemsaflex are registered trademarks property of "Pemsa Cable Management, S.A."

3C Strut 40x30x1.5

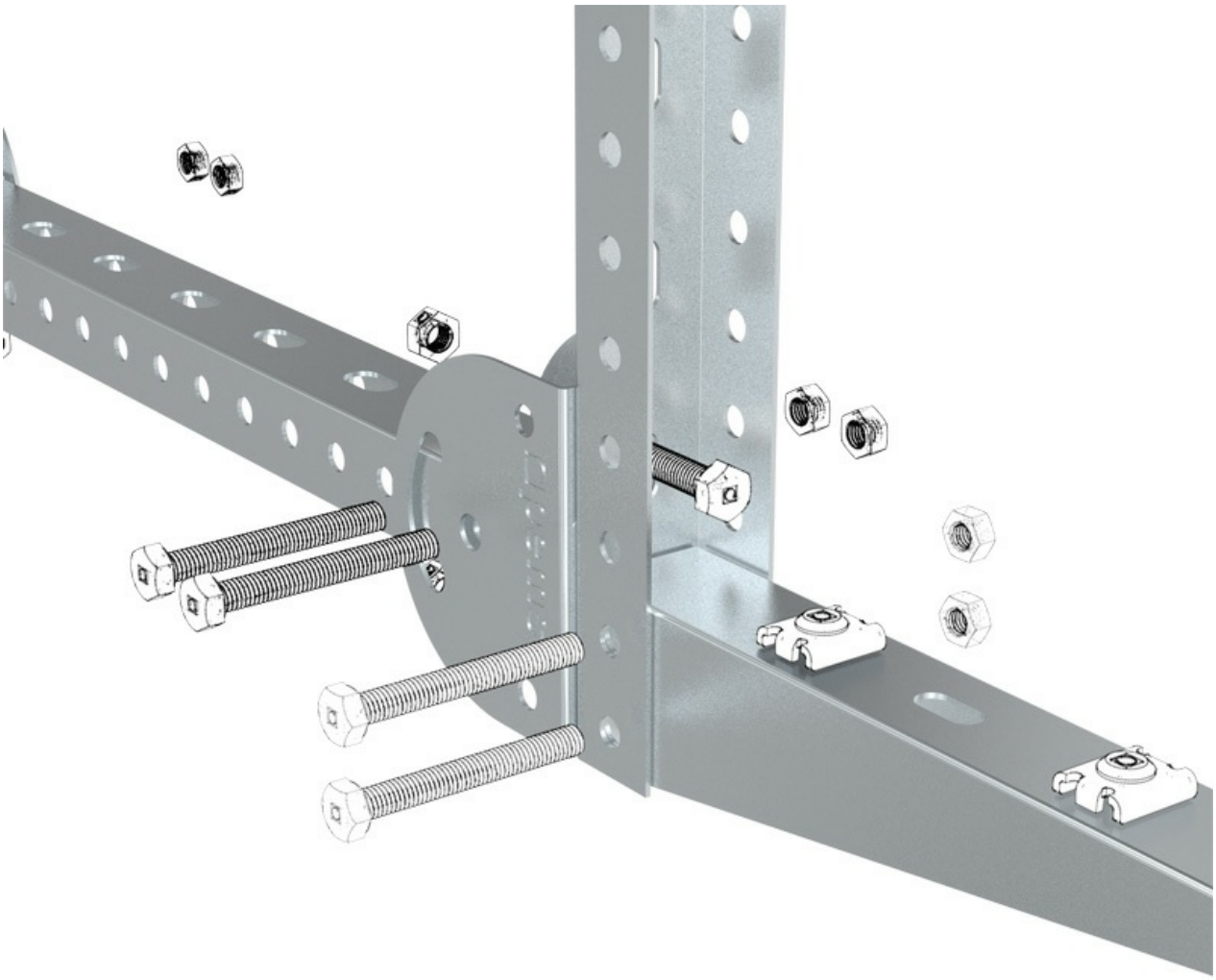

Any information included in this document is property of Pemsa®. It cannot be copied, total or partially, nor disclosed to third parties nor used without the explicit and written authorization by Pemsa®. These documents total or partially, can be subject to patent and/or be patent pending and therefore protected by intellectual and industrial property rights. Pemsa, Rejiband, Pemsaband, Inducanal, Rejitech, Megaband, Pemsaflex are registered trademarks property of "Pemsa Cable Management, S.A."