# Light Duty Channel 41x21

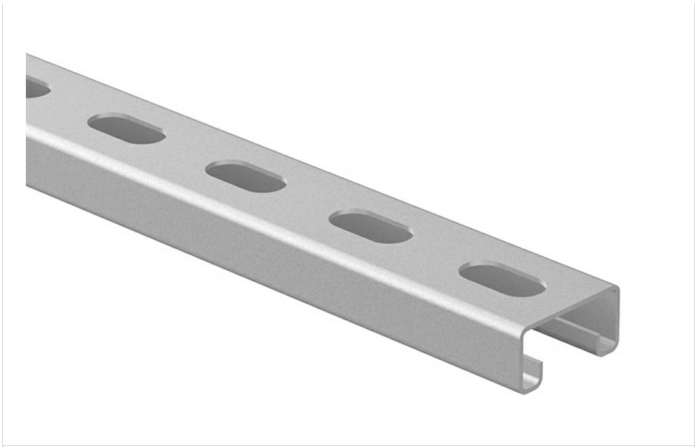

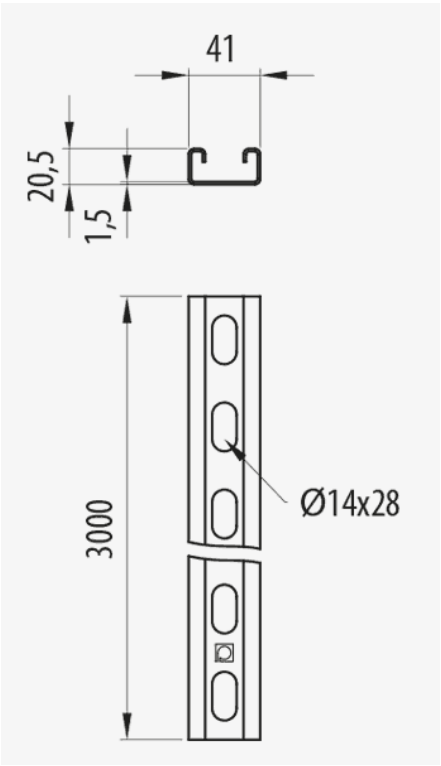


## Description

Metal channel 41x21 mm and 1.5 mm thick for the support of Rejiband® wire mesh trays, Pemsaband® sheet trays and Megaband® ladder in cable management installations. It allows the construction of various types of suspended wall and support structures etc. Made of steel and with PG Protection System.

## Advantages

Versatile way to simplify the installation of horizontal supports.

It facilitates ceiling installations of sections of tray for cable management.

It has multiple holes that facilitate the connection possibilities.

CE conformity to directive 2014/35 / EU.

PG protection system, according to BS-EN-10142, suitable for indoor installations in industrial environments. Corrosion resistance class 3.

## Applications

Suitable for the creation of support structures for indoor installations of Rejiband® and Pemsaband® trays and Megaband® ladder in electrical wiring and / or telecommunications in a dry atmosphere without contaminants.

## Solutions

OFFSHORE, PORTS TUNNELS INFRASTRUCTURES



Any information included in this document is property of Pemsa®. It cannot be copied, total or partially, nor disclosed to third parties nor used without the explicit and written authorization by Pemsa®. These documents total or partially, can be subject to patent and/or be patent pending and therefore protected by intellectual and industrial property rights. Pemsa, Rejiband, Pemsaband, Inducanal, Rejitech, Megaband, Pemsaflex are registered trademarks property of "Pemsa Cable Management, S.A."

# Light Duty Channel 41x21

## Main technical characteristics

ETIM 10
EC000386

## Product data

| Ⓢ | Class IEC 61537 | | | REF | kg/u | u | Ⓜ | e(mm) | | |
|---|---|---|---|---|---|---|---|---|---|---|
| PG | Class 3 | 21 | 3 | 67030075 | 1,120 | 3 | Steel with surface coating | 1.5 | -50 / 150 ºC | A1 No combustible |

## Ⓢ Protection System

**CU** - Copper electroplated

**PG** - Pregalvanised

**EZ** - Electrogalvanised

**BC** - Electrogalvanised Bichromate

**BK8** - High Resistance Coating

**GC** - Hot Dip Galvanising

**INOX** - Stainless Steel

**PT** - Polyester Paint

**AL** - Aluminum

**LN** - Brass or Nickel-plated brass

## Ⓜ Insulating materials

**PC+ABS** - Halogen Free Polycarbonate + ABS

**PVC** - Polyvinyl Chloride

**PP** - Halogen Free Polypropylene

**PA6** - Halogen Free Polyamide 6

**PA12** - Halogen Free Polyamide 12

**PU** - Polyurethane

**PE** - Polyethylene

**NBR** - NBR rubber

**PET** - Thermoplastic Polyester

**TPV** - Thermoplastic



Any information included in this document is property of Pemsa®. It cannot be copied, total or partially, nor disclosed to third parties nor used without the explicit and written authorization by Pemsa®. These documents total or partially, can be subject to patent and/or be patent pending and therefore protected by intellectual and industrial property rights. Pemsa, Rejiband, Pemsaband, Inducanal, Rejitech, Megaband, Pemsaflex are registered trademarks property of "Pemsa Cable Management, S.A."

# Light Duty Channel 41x21

## Product applications

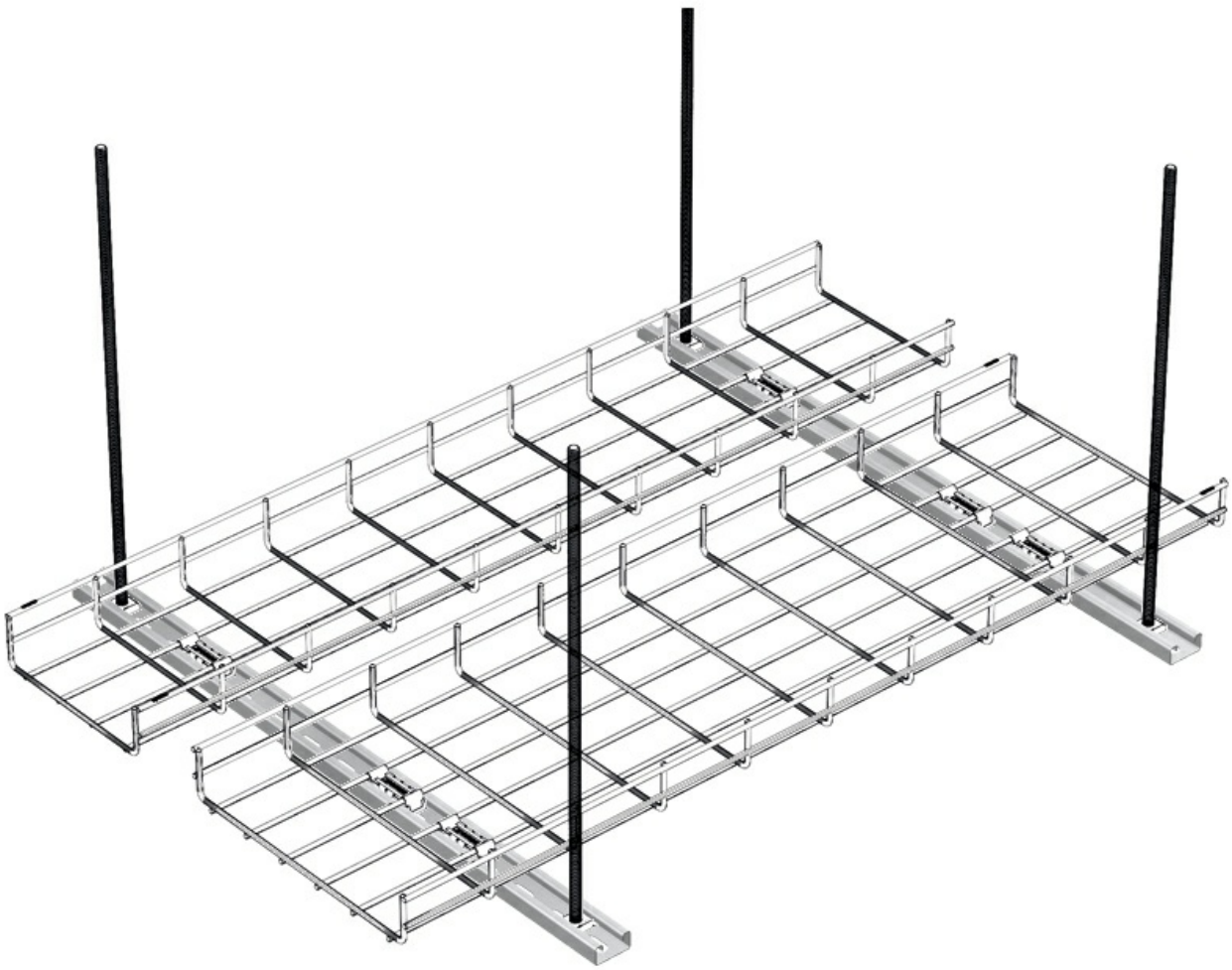



Any information included in this document is property of Pemsa®. It cannot be copied, total or partially, nor disclosed to third parties nor used without the explicit and written authorization by Pemsa®. These documents total or partially, can be subject to patent and/or be patent pending and therefore protected by intellectual and industrial property rights. Pemsa, Rejiband, Pemsaband, Inducanal, Rejitech, Megaband, Pemsaflex are registered trademarks property of "Pemsa Cable Management, S.A."

# Light Duty Channel 41x21

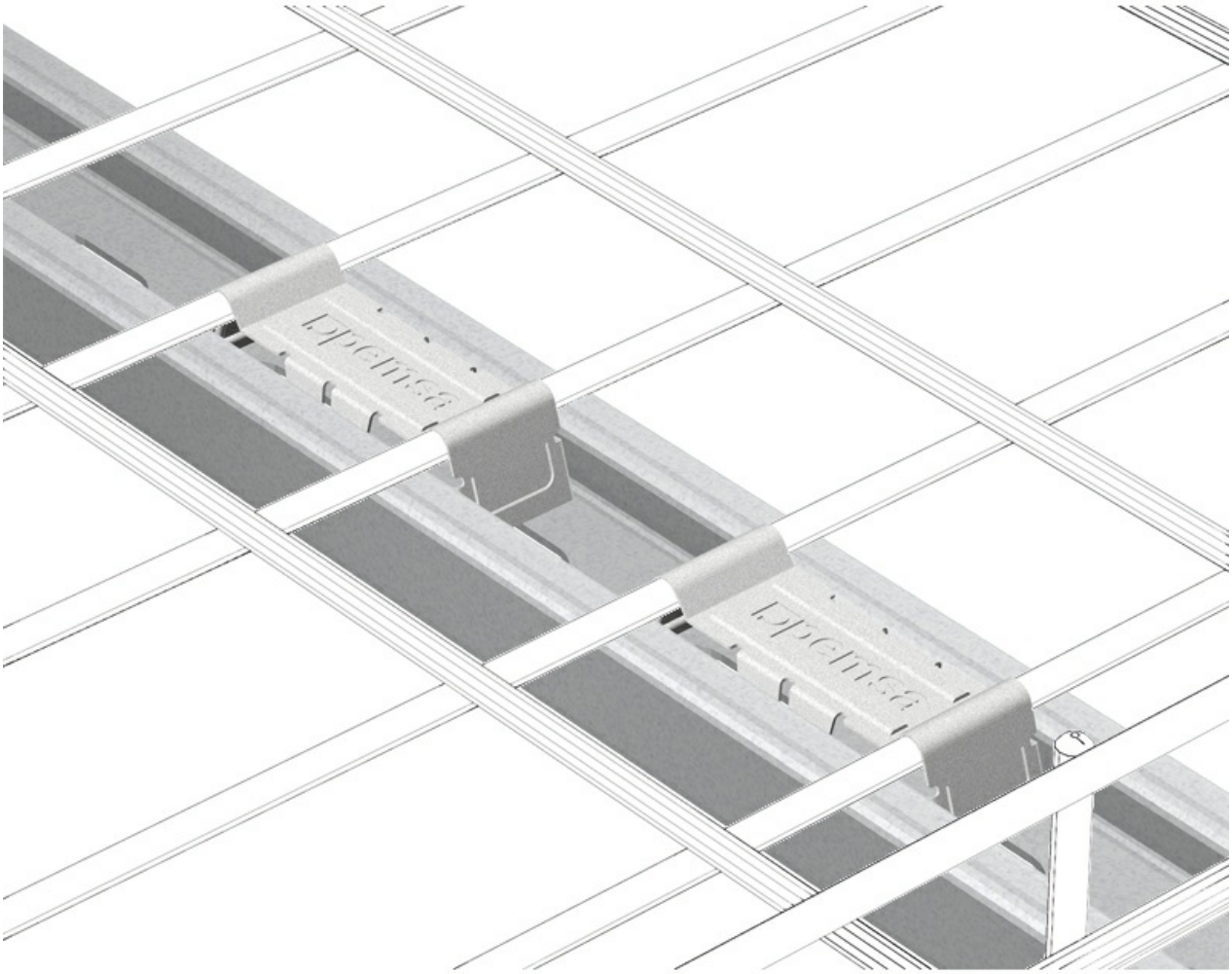



Any information included in this document is property of Pemsa®. It cannot be copied, total or partially, nor disclosed to third parties nor used without the explicit and written authorization by Pemsa®. These documents total or partially, can be subject to patent and/or be patent pending and therefore protected by intellectual and industrial property rights. Pemsa, Rejiband, Pemsaband, Inducanal, Rejitech, Megaband, Pemsaflex are registered trademarks property of "Pemsa Cable Management, S.A."

# Light Duty Channel 41x21

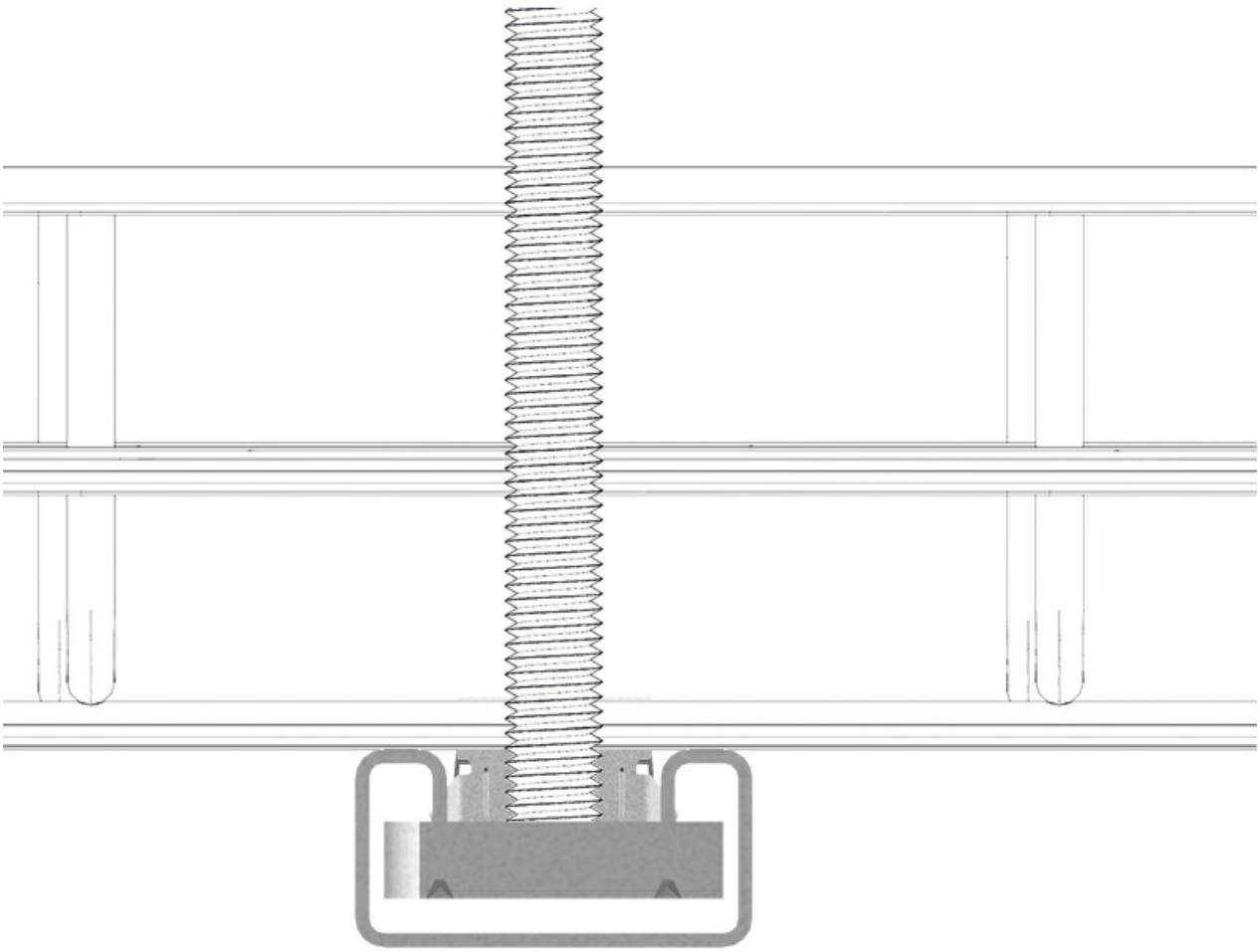



Any information included in this document is property of Pemsa®. It cannot be copied, total or partially, nor disclosed to third parties nor used without the explicit and written authorization by Pemsa®. These documents total or partially, can be subject to patent and/or be patent pending and therefore protected by intellectual and industrial property rights. Pemsa, Rejiband, Pemsaband, Inducanal, Rejitech, Megaband, Pemsaflex are registered trademarks property of "Pemsa Cable Management, S.A."