Light Duty Channel 41x41

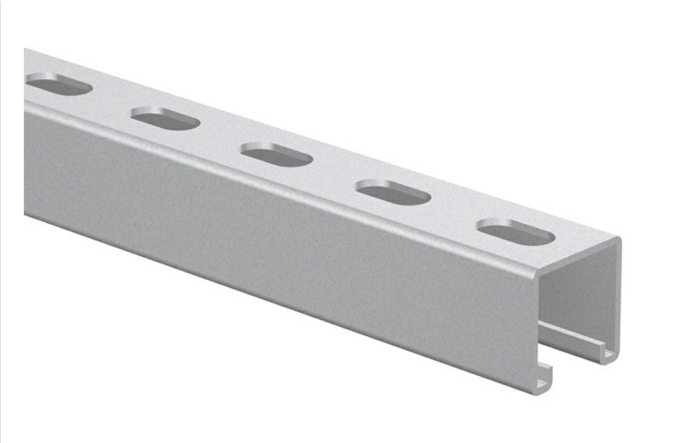

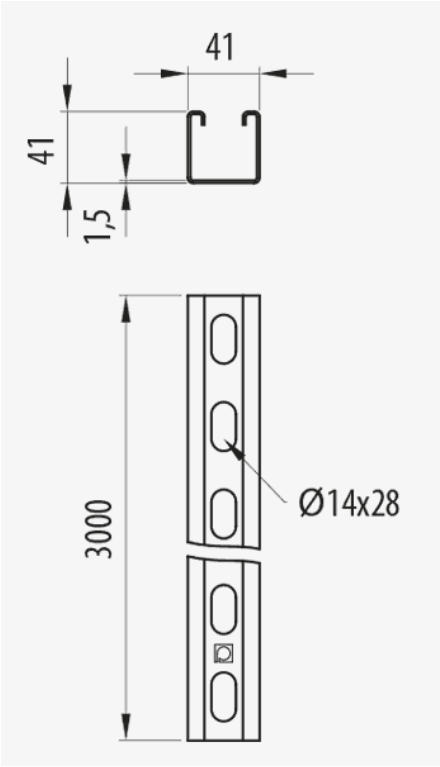

Description

Metal channel 41x41 mm and 1.5 mm thick for the support of Rejiband® wire mesh trays, Pemsaband® sheet trays and Megaband® ladder in cable management installations. It allows the construction of various types of suspended wall and support structures etc. Made of steel and with PG Protection System.

Advantages

Versatile way to simplify the installation of horizontal supports.

It facilitates ceiling installations of sections of tray for cable management.

It has multiple holes that facilitate the connection possibilities.

CE conformity to directive 2014/35 / EU.

PG protection system, according to BS-EN-10142, suitable for indoor installations in industrial environments. Corrosion resistance class 3.

Applications

Suitable for the creation of support structures for indoor installations of Rejiband® and Pemsaband® trays and Megaband® ladder in electrical wiring and / or telecommunications in a dry atmosphere without contaminants.

Solutions

INDUSTRIA PETROQUÍMICA

TUNELES. INFRAESTRUCTURAS

Any information included in this document is property of Pemsa®. It cannot be copied, total or partially, nor disclosed to third parties nor used without the explicit and written authorization by Pemsa®. These documents total or partially, can be subject to patent and/or be patent pending and therefore protected by intellectual and industrial property rights. Pemsa, Rejiband, Pemsaband, Inducanal, Rejitech, Megaband, Pemsaflex are registered trademarks property of "Pemsa Cable Management, S.A."

Light Duty Channel 41x41

Main technical characteristics

ETIM
EC000386

Product data

Ⓢ	Class IEC 61537			REF	kg/u		Ⓜ	e(mm)		
PG	Class 3	41	3	67030074	1.590	3	Steel with surface coating	1.5	-50 / 150 ºC	A1 No combustible

Ⓢ Protection System

CU - Copper electroplated

PG - Pregalvanised

EZ - Electrogalvanised

BC - Electrogalvanised Bichromate

BK8 - High Resistance Coating

GC - Hot Dip Galvanising

INOX - Stainless Steel

PT - Polyester Paint

AL - Aluminum

LN - Brass or Nickel-plated brass

Ⓜ Insulating materials

PC+ABS - Halogen Free Polycarbonate + ABS

PVC - Polyvinyl Chloride

PP - Halogen Free Polypropylene

PA6 - Halogen Free Polyamide 6

PA12 - Halogen Free Polyamide 12

PU - Polyurethane

PE - Polyethylene

NBR - NBR rubber

PET - Thermoplastic Polyester

TPV - Thermoplastic

Any information included in this document is property of Pemsa®. It cannot be copied, total or partially, nor disclosed to third parties nor used without the explicit and written authorization by Pemsa®. These documents total or partially, can be subject to patent and/or be patent pending and therefore protected by intellectual and industrial property rights. Pemsa, Rejiband, Pemsaband, Inducanal, Rejitech, Megaband, Pemsaflex are registered trademarks property of "Pemsa Cable Management, S.A."

Light Duty Channel 41x41

Product applications

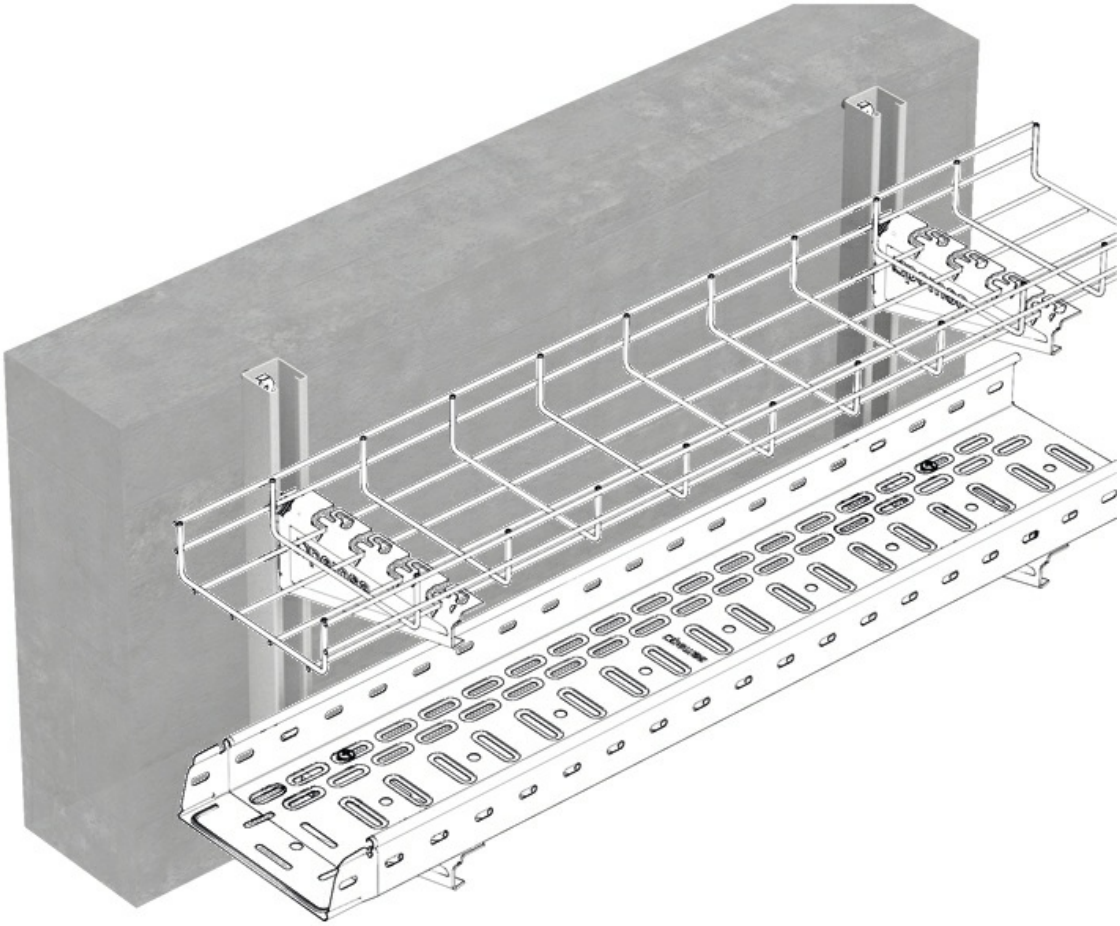

Any information included in this document is property of Pemsa®. It cannot be copied, total or partially, nor disclosed to third parties nor used without the explicit and written authorization by Pemsa®. These documents total or partially, can be subject to patent and/or be patent pending and therefore protected by intellectual and industrial property rights. Pemsa, Rejiband, Pemsaband, Inducanal, Rejitech, Megaband, Pemsaflex are registered trademarks property of "Pemsa Cable Management, S.A."

Light Duty Channel 41x41

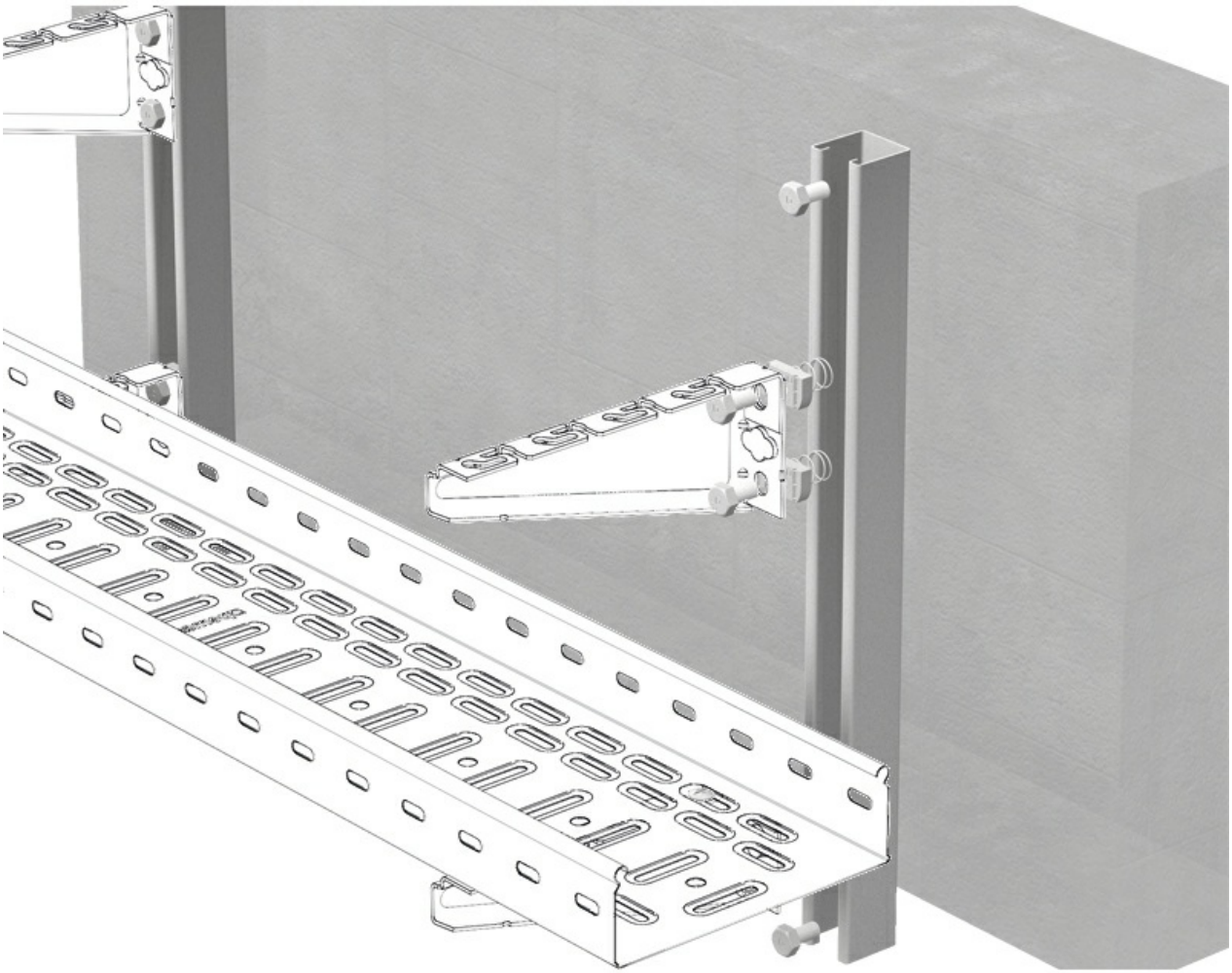

Any information included in this document is property of Pemsa®. It cannot be copied, total or partially, nor disclosed to third parties nor used without the explicit and written authorization by Pemsa®. These documents total or partially, can be subject to patent and/or be patent pending and therefore protected by intellectual and industrial property rights. Pemsa, Rejiband, Pemsaband, Inducanal, Rejitech, Megaband, Pemsaflex are registered trademarks property of "Pemsa Cable Management, S.A."