SPLUS Omega Channel

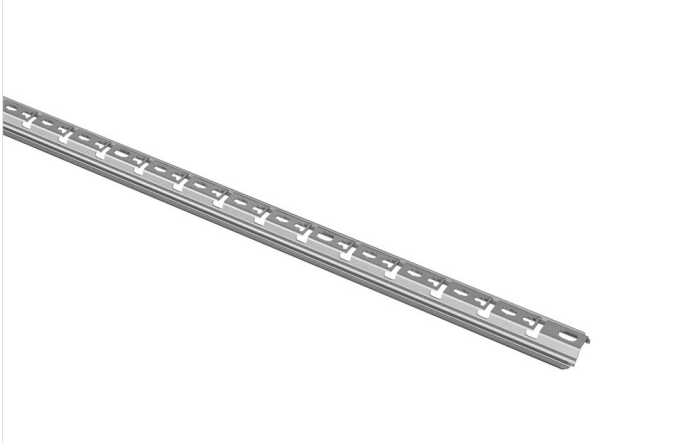

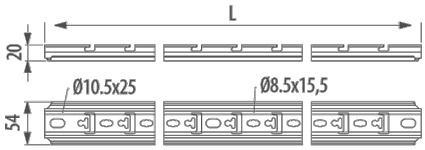

Description

Channel with omega profile and universal connection system for Rejiband® and Pemsaband® trays. It allows you to configure different structures individually or with the help of omega SPLUS brackets to support wall or ceiling mounted tray with a threaded rod. Available in lengths of 1000, 2000 and 3000 mm. Made of steel in various Protection Systems.

Advantages

Click system allows fast connection of the wire mesh tray without the need of fixings. Greater economy and quick assembly.

Due to its dimensions and very versatile structure, it can be used in ceiling mounts as a suspension for several trays on the same line.

Performance is increased by 20% when used as a suspension or as a wall mounted rail with other brackets attached.

CE conformity to directive 2014/35 / EU.

Available in PG and GC protection systems.

Applications

Suitable for the creation of support structures for installations of Rejiband® and Pemsaband® trays in the management of electrical wiring and / or telecommunications in the tertiary sector.

Solutions

INDUSTRIA PETROQUÍMICA FOTOVOLTAICA CENTROS DE DATOS EDIFICACIÓN. TERCIARIO TUNELES. INFRAESTRUCTURAS RESISTENCIA AL FUEGO

Any information included in this document is property of Pemsa®. It cannot be copied, total or partially, nor disclosed to third parties nor used without the explicit and written authorization by Pemsa®. These documents total or partially, can be subject to patent and/or be patent pending and therefore protected by intellectual and industrial property rights. Pemsa, Rejiband, Pemsaband, Inducanal, Rejitech, Megaband, Pemsaflex are registered trademarks property of "Pemsa Cable Management, S.A."

SPLUS Omega Channel

Main technical characteristics

1	Steel with surface coating	-50 / 150 °C	A1 No combustible	ETIM EC000386

Product data

				kg/u
PG	Class 3	1	67020110	1.170
PG	Class 3	2	67020111	2.290
PG	Class 3	3	67020112	3.400
AZ+	Class 8	1	67030110	1.180
AZ+	Class 8	2	67030111	2.310
AZ+	Class 8	3	67030112	3.440

Protection System

CU - Copper electroplated

PG - Pregalvanised

EZ - Electrogalvanised

BC - Electrogalvanised Bichromate

BK8 - High Resistance Coating

GC - Hot Dip Galvanising

INOX - Stainless Steel

PT - Polyester Paint

AL - Aluminum

LN - Brass or Nickel-plated brass

Insulating materials

PC+ABS - Halogen Free Polycarbonate + ABS

PVC - Polyvinyl Chloride

PP - Halogen Free Polypropylene

PA6 - Halogen Free Polyamide 6

PA12 - Halogen Free Polyamide 12

PU - Polyurethane

PE - Polyethylene

NBR - NBR rubber

PET - Thermoplastic Polyester

TPV - Thermoplastic

Any information included in this document is property of Pemsa®. It cannot be copied, total or partially, nor disclosed to third parties nor used without the explicit and written authorization by Pemsa®. These documents total or partially, can be subject to patent and/or be patent pending and therefore protected by intellectual and industrial property rights. Pemsa, Rejiband, Pemsaband, Inducanal, Rejitech, Megaband, Pemsaflex are registered trademarks property of "Pemsa Cable Management, S.A."

SPLUS Omega Channel

Product applications

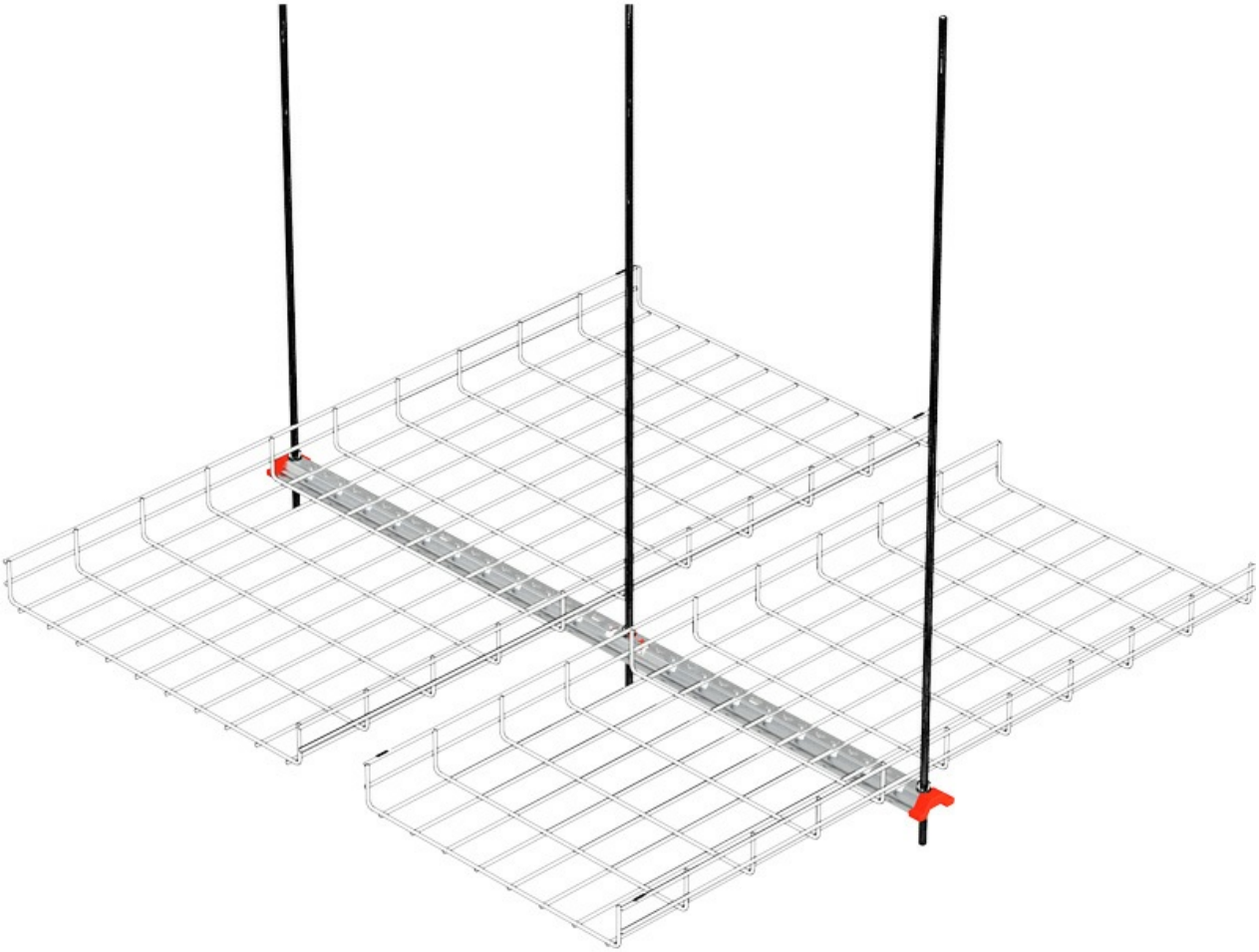

Any information included in this document is property of Pemsa®. It cannot be copied, total or partially, nor disclosed to third parties nor used without the explicit and written authorization by Pemsa®. These documents total or partially, can be subject to patent and/or be patent pending and therefore protected by intellectual and industrial property rights. Pemsa, Rejiband, Pemsaband, Inducanal, Rejitech, Megaband, Pemsaflex are registered trademarks property of "Pemsa Cable Management, S.A."

SPLUS Omega Channel

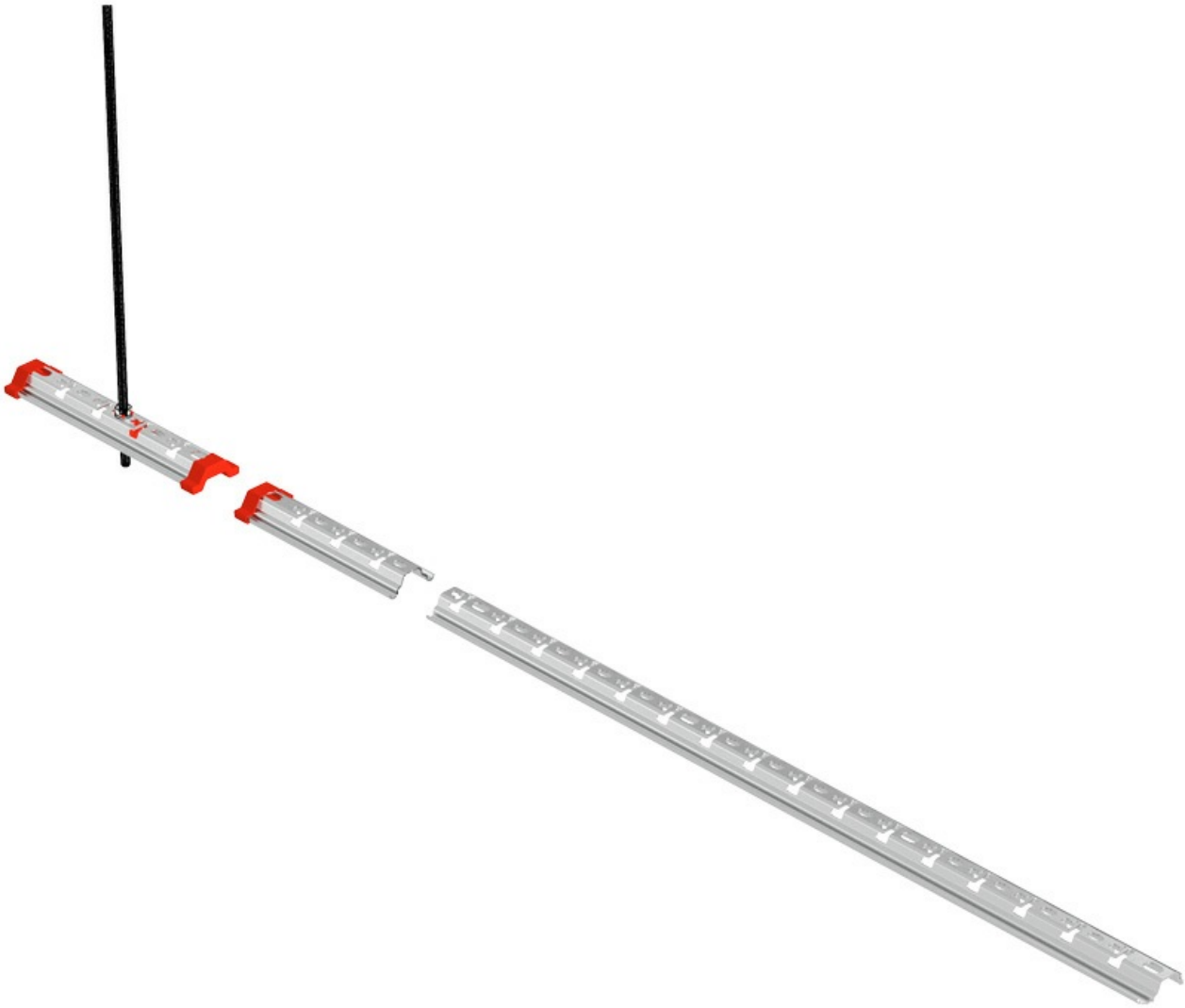

Any information included in this document is property of Pemsa®. It cannot be copied, total or partially, nor disclosed to third parties nor used without the explicit and written authorization by Pemsa®. These documents total or partially, can be subject to patent and/or be patent pending and therefore protected by intellectual and industrial property rights. Pemsa, Rejiband, Pemsaband, Inducanal, Rejitech, Megaband, Pemsaflex are registered trademarks property of "Pemsa Cable Management, S.A."