Double 90° Bracket n°15

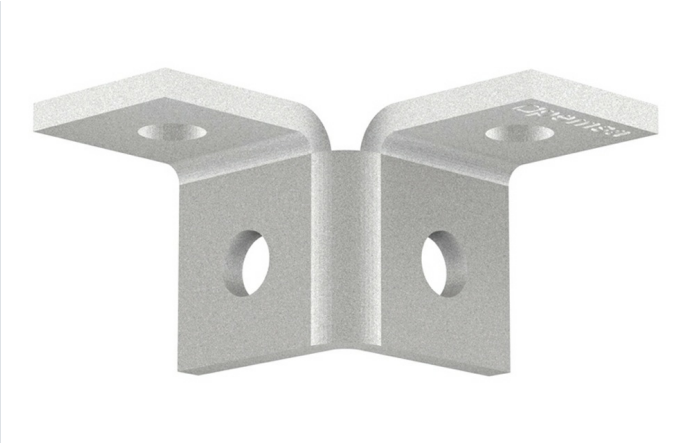

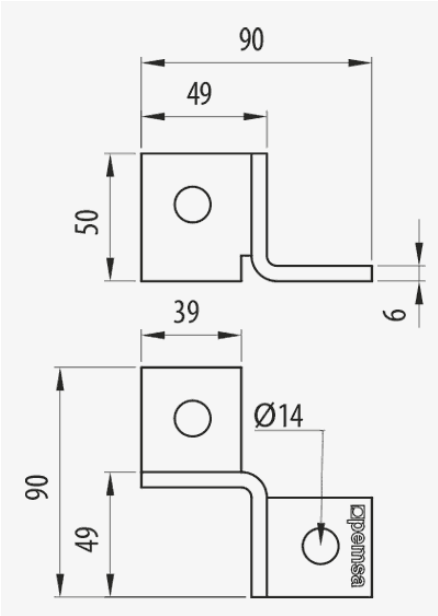

Description

Metal double bracket N° 15 in a square L shape with an angle of 90° for the assembly of two channels that cross perpendicularly for support structures in the installation of trays. It can also be used as a vertical support for connecting channels to the floor or ceiling. Suitable for 41x21 mm and 41x41 mm channel. Made of steel and GC Protection System.

Advantages

It allows the perpendicular joining of three sections of channel. It can also be used connecting channel to the ceiling or floor.

Connect with 4 hexagonal bolts and M10 channel nuts.

Available for 41x21 and 41x41 channels.

CE conformity to directive 2014/35 / EU.

GC protection system (standard UNE-EN ISO 1461), suitable for outdoor installations and in aggressive environments. Corrosion resistance class 6.

Applications

Suitable for connection with 41x21 mm and 41x41 mm channels for the creation of support structures for tray installations in the conduction of electric cables and / or telecommunications in public buildings, infrastructures and civil works, industrial facilities and the tertiary sector.

Solutions

INDUSTRIA PETROQUÍMICA TUNELES. INFRAESTRUCTURAS

Any information included in this document is property of Pemsa®. It cannot be copied, total or partially, nor disclosed to third parties nor used without the explicit and written authorization by Pemsa®. These documents total or partially, can be subject to patent and/or be patent pending and therefore protected by intellectual and industrial property rights. Pemsa, Rejiband, Pemsaband, Inducanal, Rejitech, Megaband, Pemsaflex are registered trademarks property of "Pemsa Cable Management, S.A."

Double 90° Bracket n°15

Main technical characteristics

ETIM
EC000482

Product data

Ⓢ	Class IEC 61537	REF	kg/u		Ⓜ		
GC	Class 6	67030215	0.308	1	Steel with surface coating	-50 / 150 ºC	A1 No combustible

Ⓢ Protection System

CU - Copper electroplated

PG - Pregalvanised

EZ - Electrogalvanised

BC - Electrogalvanised Bichromate

BK8 - High Resistance Coating

GC - Hot Dip Galvanising

INOX - Stainless Steel

PT - Polyester Paint

AL - Aluminum

LN - Brass or Nickel-plated brass

Ⓜ Insulating materials

PC+ABS - Halogen Free Polycarbonate + ABS

PVC - Polyvinyl Chloride

PP - Halogen Free Polypropylene

PA6 - Halogen Free Polyamide 6

PA12 - Halogen Free Polyamide 12

PU - Polyurethane

PE - Polyethylene

NBR - NBR rubber

PET - Thermoplastic Polyester

TPV - Thermoplastic

Any information included in this document is property of Pemsa®. It cannot be copied, total or partially, nor disclosed to third parties nor used without the explicit and written authorization by Pemsa®. These documents total or partially, can be subject to patent and/or be patent pending and therefore protected by intellectual and industrial property rights. Pemsa, Rejiband, Pemsaband, Inducanal, Rejitech, Megaband, Pemsaflex are registered trademarks property of "Pemsa Cable Management, S.A."

Double 90° Bracket n°15

Product applications

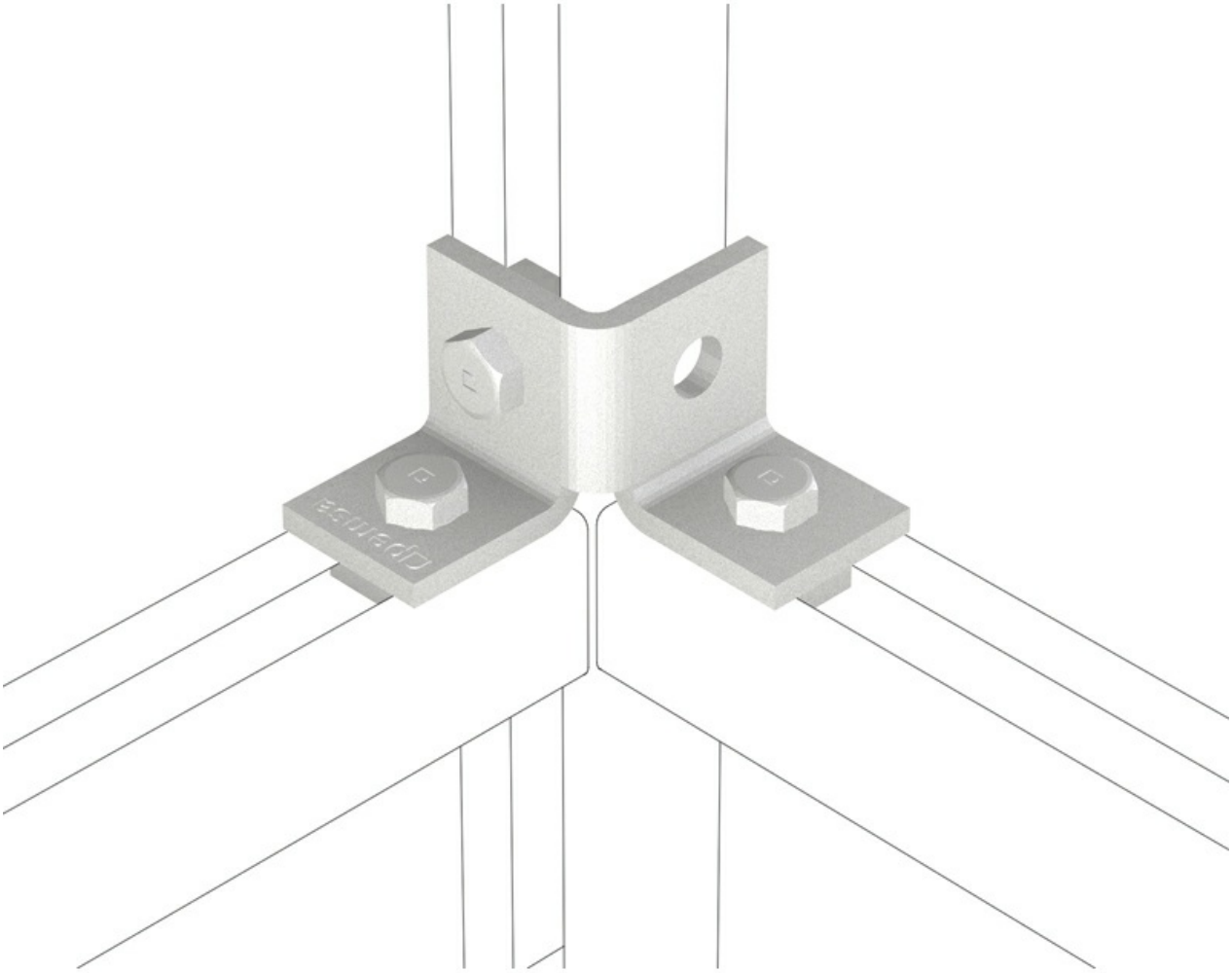

Any information included in this document is property of Pemsa®. It cannot be copied, total or partially, nor disclosed to third parties nor used without the explicit and written authorization by Pemsa®. These documents total or partially, can be subject to patent and/or be patent pending and therefore protected by intellectual and industrial property rights. Pemsa, Rejiband, Pemsaband, Inducanal, Rejitech, Megaband, Pemsaflex are registered trademarks property of "Pemsa Cable Management, S.A."