Rejiband Rapide (Ref: 60582100)

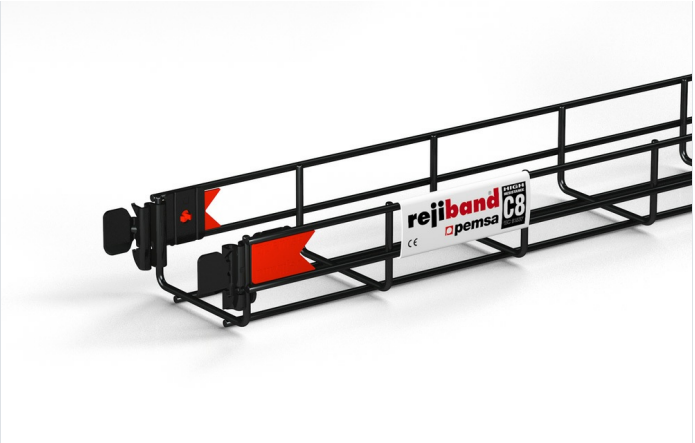

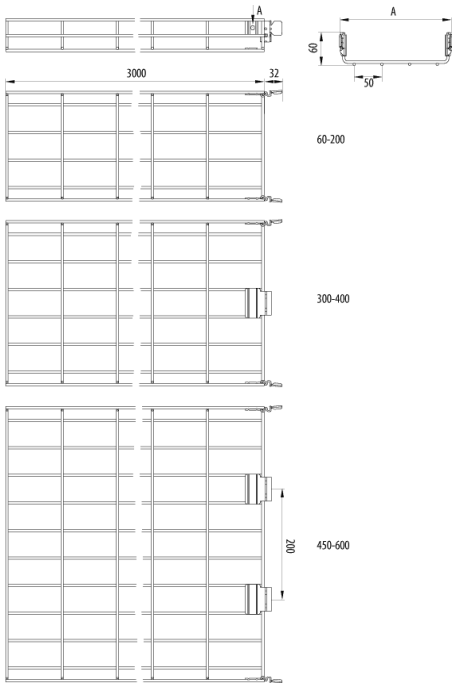

Description

Wire mesh tray made of steel with quick-connect Click system and rounded safety edge for the support and management of cables. Of 60 mm height, Width 100 mm, With BK8 protection system. The Rejiband® Rapide Cable Tray is made up of wire mesh rods that provide high strength and elasticity. Easy to assemble, thanks to its flexibility and its quick-connect Click system, it allows the connection between sections of trays without the need for screws, which means savings in material and labour costs. Manufactured according to international standard IEC 61537. It is distributed in different sizes and in several Protection Systems.

Advantages

Flange heights of 60 or 100 mm and widths of 60, 100, 150, 200, 300, 400, 450, 500 and 600 mm with a wide range of accessories.

Rounded safety edge that prevents damage to the cables and harm to the installer.

Electrical continuity guaranteed according to standard IEC61537.

High resistance, flexibility and adaptable to each project providing a saving of more than 30% in the installation.

Rapid connection system with pre-fitted couplers reduces installation time by 40%.

Applications

Rapid installation of wire mesh trays for the Support, management and distribution of cables in Electrical and/or telecommunications installations in: Civil Works, Tunnels, Car Parks, Public Buildings, Shopping Centres, Major Infrastructures, Airports, Underground and Railway, Tertiary sector and industrial applications: Naval, Petrochemical, Textile, Chemical and Food.

Solutions

PHARMACEUTICAL INDUSTRY

OFFSHORE, PORTS

ENERGY

RENEWABLE ENERGIES

DATA CENTERS

SERVICE AND RETAIL

TUNNELS INFRASTRUCTURES

FIRE RESISTANCE SOLUTION

Any information included in this document is property of Pemsa®. It cannot be copied, total or partially, nor disclosed to third parties nor used without the explicit and written authorization by Pemsa®. These documents total or partially, can be subject to patent and/or be patent pending and therefore protected by intellectual and industrial property rights. Pemsa, Rejiband, Pemsaband, Inducanal, Rejitech, Megaband, Pemsaflex are registered trademarks property of "Pemsa Cable Management, S.A."

Rejiband Rapide (Ref: 60582100)

Product data

ETIM 10	EC000853	**u**	24
Huella de CO2. GWP A1-A3 (kg CO2 eq.)	0,825	**Material**	Steel with surface coating
Protection System	BK8	**Impact Strength (J)**	20 J
Finish	BLACK C8	**Section (mm2)**	4442
Resistance Class	Class 8	**Working temperature range (°C)**	-50 / 150 °C
Flange (mm)	60	**Fire resistance**	E90 (90 min. 1000°C)
Width (mm)	100		
Length (m)	3		
kg/u	0,817		

Ⓢ Protection System

CU - Copper electroplated

PG - Pregalvanised

EZ - Electrogalvanised

BC - Electrogalvanised Bichromate

BK8 - High Resistance Coating

GC - Hot Dip Galvanising

INOX - Stainless Steel

PT - Polyester Paint

AL - Aluminum

LN - Brass or Nickel-plated brass

Ⓜ Insulating materials

PC+ABS - Halogen Free Polycarbonate + ABS

PVC - Polyvinyl Chloride

PP - Halogen Free Polypropylene

PA6 - Halogen Free Polyamide 6

PA12 - Halogen Free Polyamide 12

PU - Polyurethane

PE - Polyethylene

NBR - NBR rubber

PET - Thermoplastic Polyester

TPV - Thermoplastic

Any information included in this document is property of Pemsa®. It cannot be copied, total or partially, nor disclosed to third parties nor used without the explicit and written authorization by Pemsa®. These documents total or partially, can be subject to patent and/or be patent pending and therefore protected by intellectual and industrial property rights. Pemsa, Rejiband, Pemsaband, Inducanal, Rejitech, Megaband, Pemsaflex are registered trademarks property of "Pemsa Cable Management, S.A."

Load diagrams

Ensayos de carga de trabajo admisible CTA para instalaciones horizontales

Valores obtenidos según la norma IEC 61537 edición 3, con un coeficiente de seguridad del 170% y sin alcanzar en ningún caso el colapso. La unión de los tramos de bandejas debe estar situada a una distancia del apoyo de entre L/4 y L/5, siendo L la distancia entre apoyos.

Safety working load tests (SWL) for horizontal installations

Values obtained according to the IEC 61537 standard, edition 3, with a safety coefficient of 170% without ever reaching the collapse point. Tray section joints be situated at a support distance of between L/4 and L/5, L being the distance between supports.

Essais de charge de travail admissible (CTA) pour les installations horizontales

Valeurs obtenues conformément à la norme CEI 61537 édition 3, avec un coefficient de sécurité de 170 % et sans jamais atteindre l'effondrement. La jonction des sections du chemin de câbles doit être située à une distance du support comprise entre L/4 et L/5, où L est la distance entre les supports.

Ensaios de carga de trabalho admissível CTA para instalações horizontais

Valores obtidos de acordo com a norma IEC 61537 edição 3, com um coeficiente de segurança de 170% e sem nunca atingir o colapso. A junção das secções de caminhos de cabos deve estar localizada a uma distância do suporte entre L/4 e L/5, sendo L a distância entre apoios.

	60									100							
	60-2	100	150	200	300	400	450	500	600	100	150	200	300	400	450	500	600
mm²	2.492	4.442	6.976	9.586	14.420	19.540	22.100	24.660	29.780	7.742	12.352	16.596	25.716	34.836	39.396	43.956	53.076

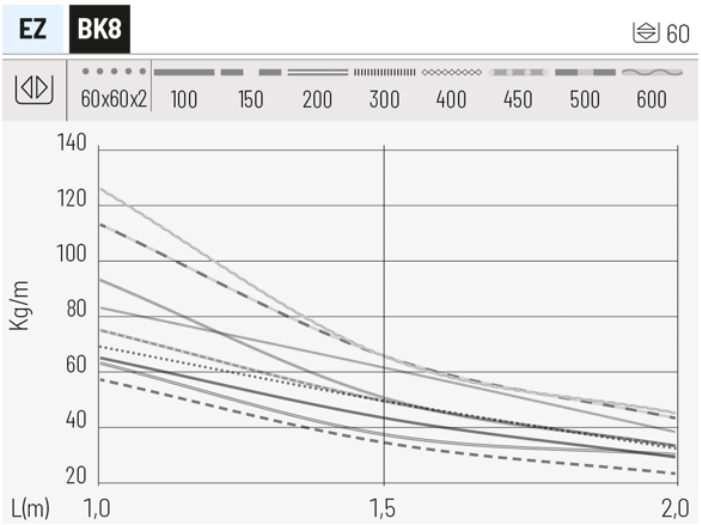

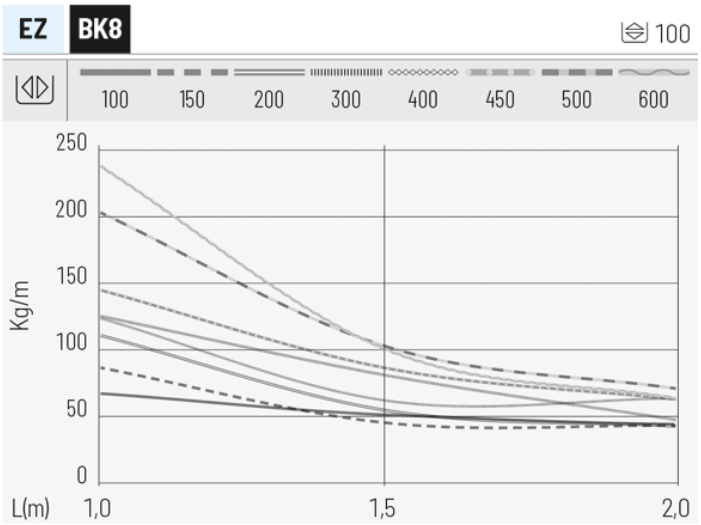

Product applications

Any information included in this document is property of Pemsa®. It cannot be copied, total or partially, nor disclosed to third parties nor used without the explicit and written authorization by Pemsa®. These documents total or partially, can be subject to patent and/or be patent pending and therefore protected by intellectual and industrial property rights. Pemsa, Rejiband, Pemsaband, Inducanal, Rejitech, Megaband, Pemsaflex are registered trademarks property of "Pemsa Cable Management, S.A."

Rejiband Rapide (Ref: 60582100)

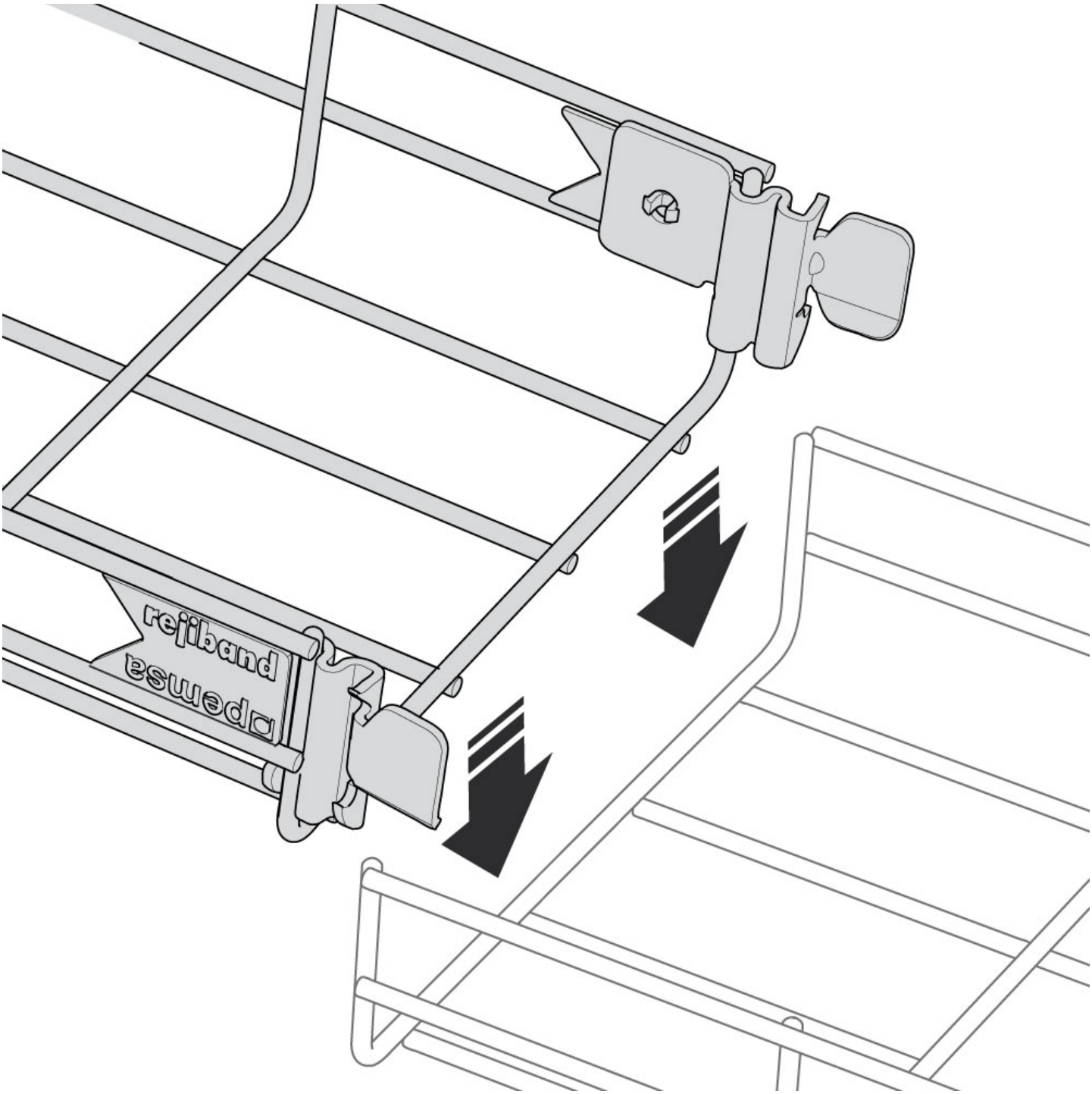

Any information included in this document is property of Pemsa®. It cannot be copied, total or partially, nor disclosed to third parties nor used without the explicit and written authorization by Pemsa®. These documents total or partially, can be subject to patent and/or be patent pending and therefore protected by intellectual and industrial property rights. Pemsa, Rejiband, Pemsaband, Inducanal, Rejitech, Megaband, Pemsaflex are registered trademarks property of "Pemsa Cable Management, S.A."

Rejiband Rapide (Ref: 60582100)

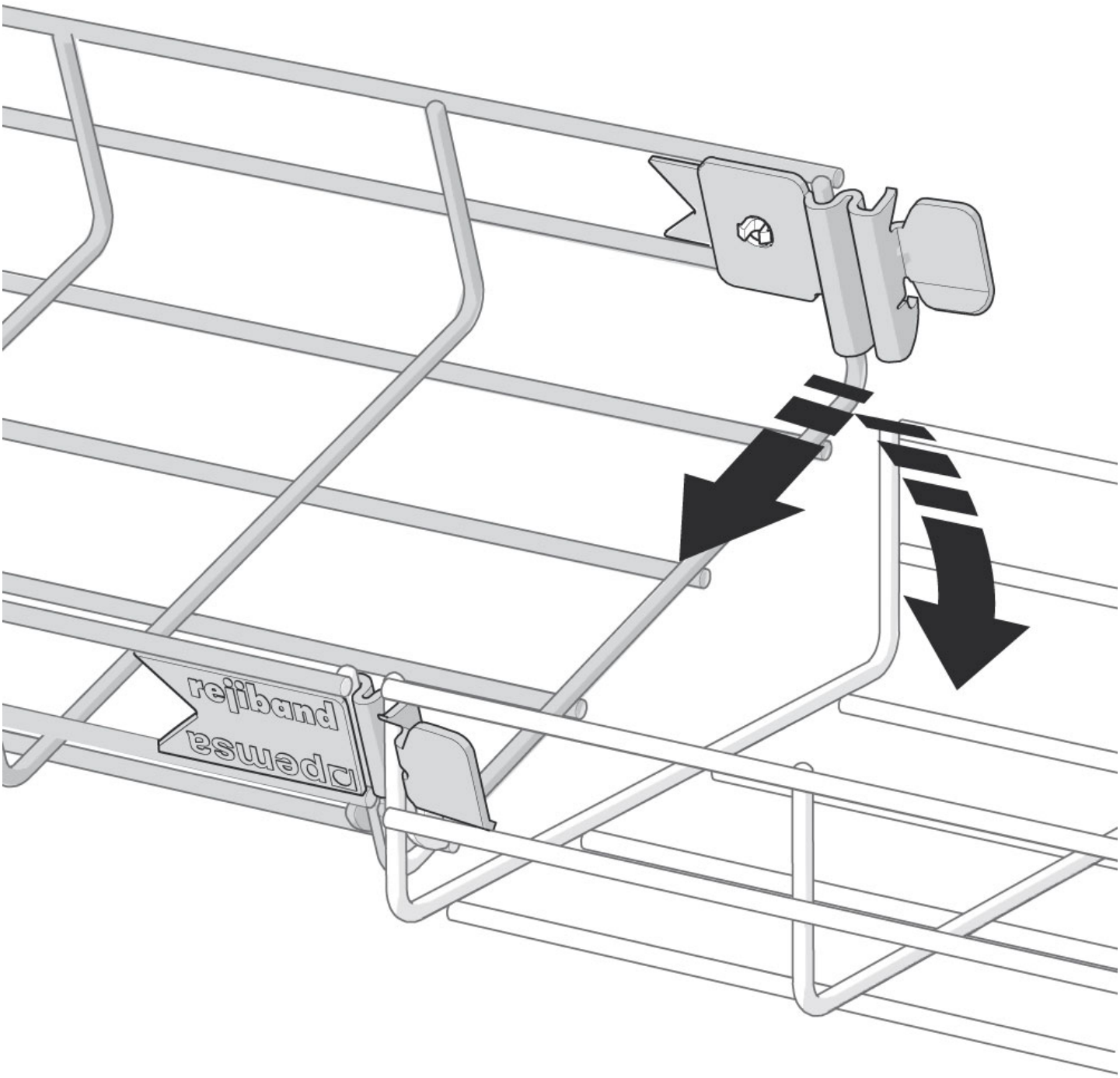

Any information included in this document is property of Pemsa®. It cannot be copied, total or partially, nor disclosed to third parties nor used without the explicit and written authorization by Pemsa®. These documents total or partially, can be subject to patent and/or be patent pending and therefore protected by intellectual and industrial property rights. Pemsa, Rejiband, Pemsaband, Inducanal, Rejitech, Megaband, Pemsaflex are registered trademarks property of "Pemsa Cable Management, S.A."

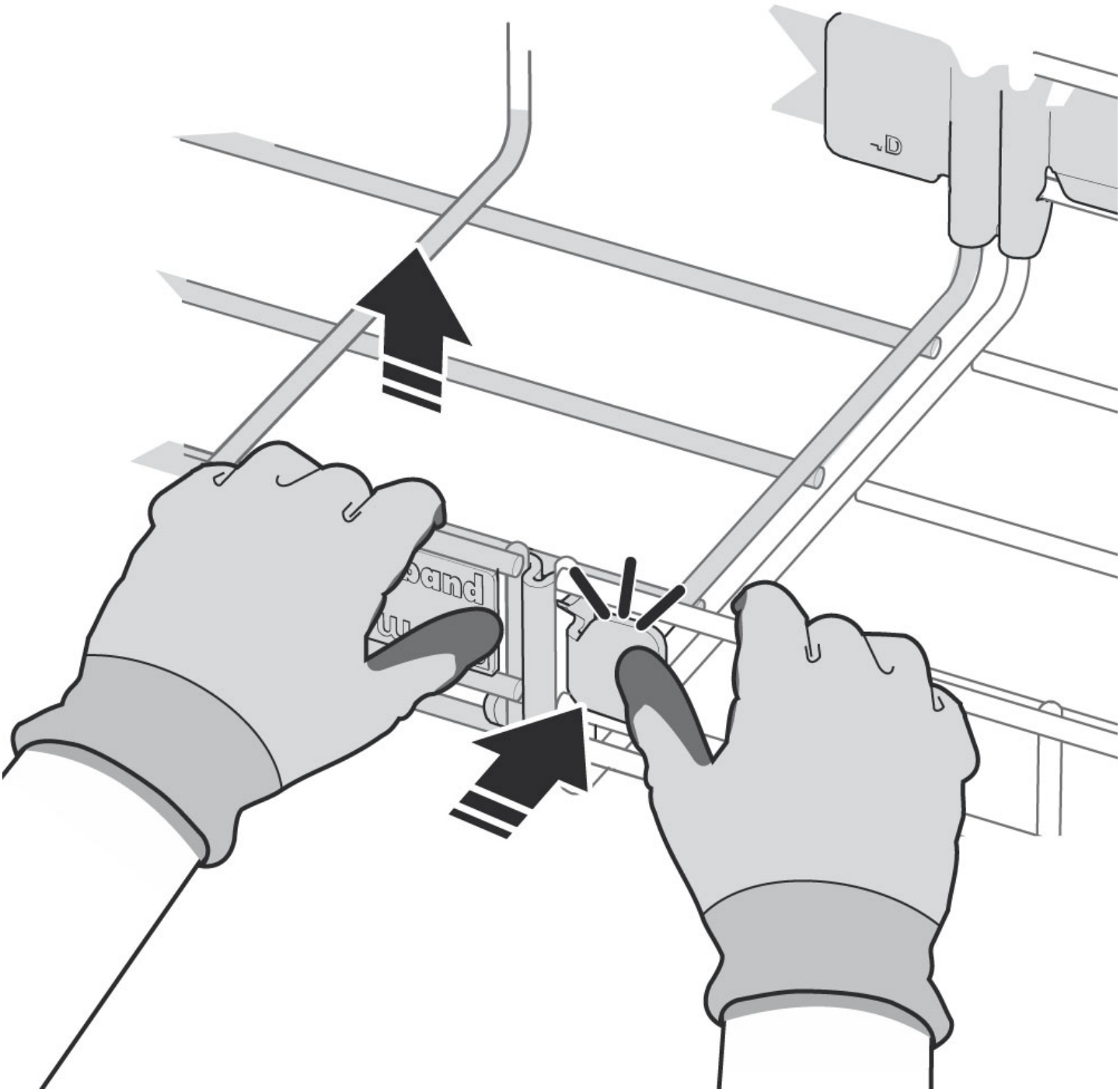

Any information included in this document is property of Pemsa®. It cannot be copied, total or partially, nor disclosed to third parties nor used without the explicit and written authorization by Pemsa®. These documents total or partially, can be subject to patent and/or be patent pending and therefore protected by intellectual and industrial property rights. Pemsa, Rejiband, Pemsaband, Inducanal, Rejitech, Megaband, Pemsaflex are registered trademarks property of "Pemsa Cable Management, S.A."

Rejiband Rapide (Ref: 60582100)

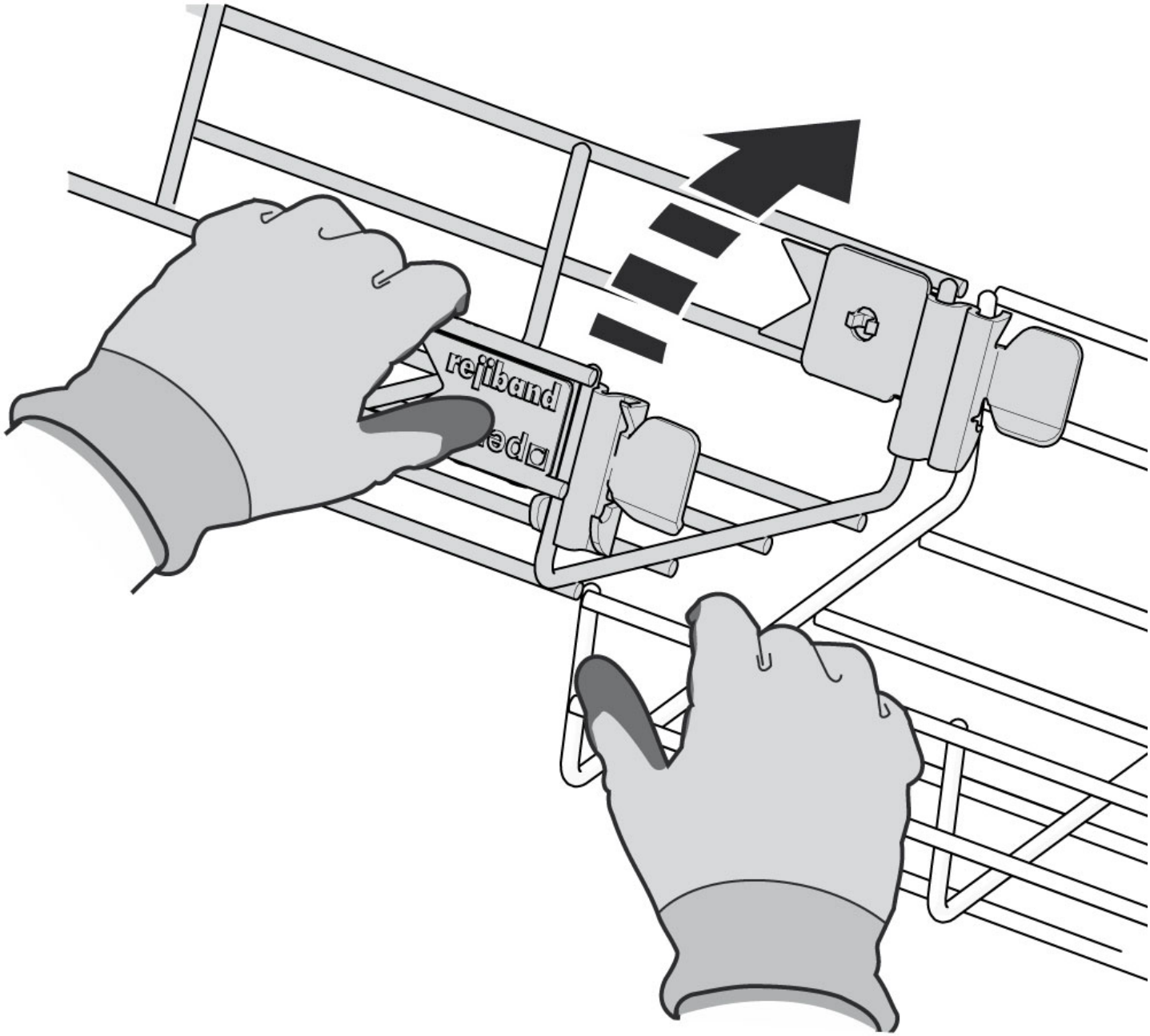

Any information included in this document is property of Pemsa®. It cannot be copied, total or partially, nor disclosed to third parties nor used without the explicit and written authorization by Pemsa®. These documents total or partially, can be subject to patent and/or be patent pending and therefore protected by intellectual and industrial property rights. Pemsa, Rejiband, Pemsaband, Inducanal, Rejitech, Megaband, Pemsaflex are registered trademarks property of "Pemsa Cable Management, S.A."