# Universal Bracket

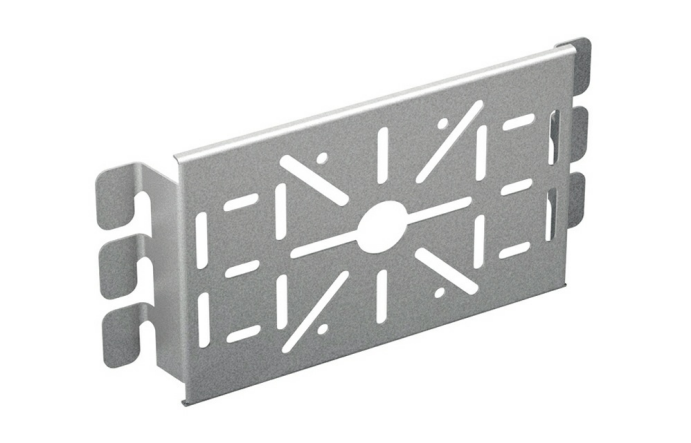

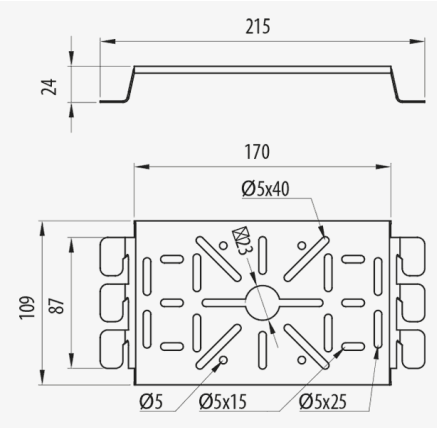


## Description

Universal steel bracket in various protection systems for the wall mounting of Rejiband® trays by means of the fast click connection system without the need of screws. The wall bracket is suitable for Rejiband® trays of 100, 150 and 200 mm width in a horizontal or vertical position, as well as for attaching boxes or other accessories. Depending on the Protection System it can be used in many different installations.

## Advantages

Fixing by quick click system.

Simple and quick assembly without the need of special tools.

Supports can be mounted on the side or base of the tray.

Installation to the wall.

It allows the fitting of boxes or other items to different positions on the rods of the tray.

## Applications

Suitable for the support of trays to the wall or for the installation of boxes or other devices on Rejiband®wire mesh trays intended for the management of cables in electrical and telecommunications installations in public buildings, infrastructures and civil works, industrial installations and tertiary sector.

## Solutions

FOOD INDUSTRY



Any information included in this document is property of Pemsa®. It cannot be copied, total or partially, nor disclosed to third parties nor used without the explicit and written authorization by Pemsa®. These documents total or partially, can be subject to patent and/or be patent pending and therefore protected by intellectual and industrial property rights. Pemsa, Rejiband, Pemsaband, Inducanal, Rejitech, Megaband, Pemsaflex are registered trademarks property of "Pemsa Cable Management, S.A."

## Main technical characteristics

| | | | |
|---|---|---|---|
| 10 | -50 / 150 °C | A1 No combustible | ETIM 10<br>EC001004 |

## Product data

| Ⓢ | Class IEC 61537 | REF | kg/u | Ⓜ |
|---|---|---|---|---|
| PG | Class 3 | 62026011 | 0,172 | Steel with surface coating |
| GC | Class 8 | 62036011 | 0,184 | Steel with surface coating |
| INOX | Class 9D | 62066011 | 0,172 | Acero inoxidable AISI 316L |
| BK8 | Class 8 | 62086011 | 0,178 | Steel with surface coating |

## Ⓢ Protection System

**CU** - Copper electroplated

**PG** - Pregalvanised

**EZ** - Electrogalvanised

**BC** - Electrogalvanised Bichromate

**BK8** - High Resistance Coating

**GC** - Hot Dip Galvanising

**INOX** - Stainless Steel

**PT** - Polyester Paint

**AL** - Aluminum

**LN** - Brass or Nickel-plated brass

## Ⓜ Insulating materials

**PC+ABS** - Halogen Free Polycarbonate + ABS

**PVC** - Polyvinyl Chloride

**PP** - Halogen Free Polypropylene

**PA6** - Halogen Free Polyamide 6

**PA12** - Halogen Free Polyamide 12

**PU** - Polyurethane

**PE** - Polyethylene

**NBR** - NBR rubber

**PET** - Thermoplastic Polyester

**TPV** - Thermoplastic



Any information included in this document is property of Pemsa®. It cannot be copied, total or partially, nor disclosed to third parties nor used without the explicit and written authorization by Pemsa®. These documents total or partially, can be subject to patent and/or be patent pending and therefore protected by intellectual and industrial property rights. Pemsa, Rejiband, Pemsaband, Inducanal, Rejitech, Megaband, Pemsaflex are registered trademarks property of "Pemsa Cable Management, S.A."

# Universal Bracket

## Product applications

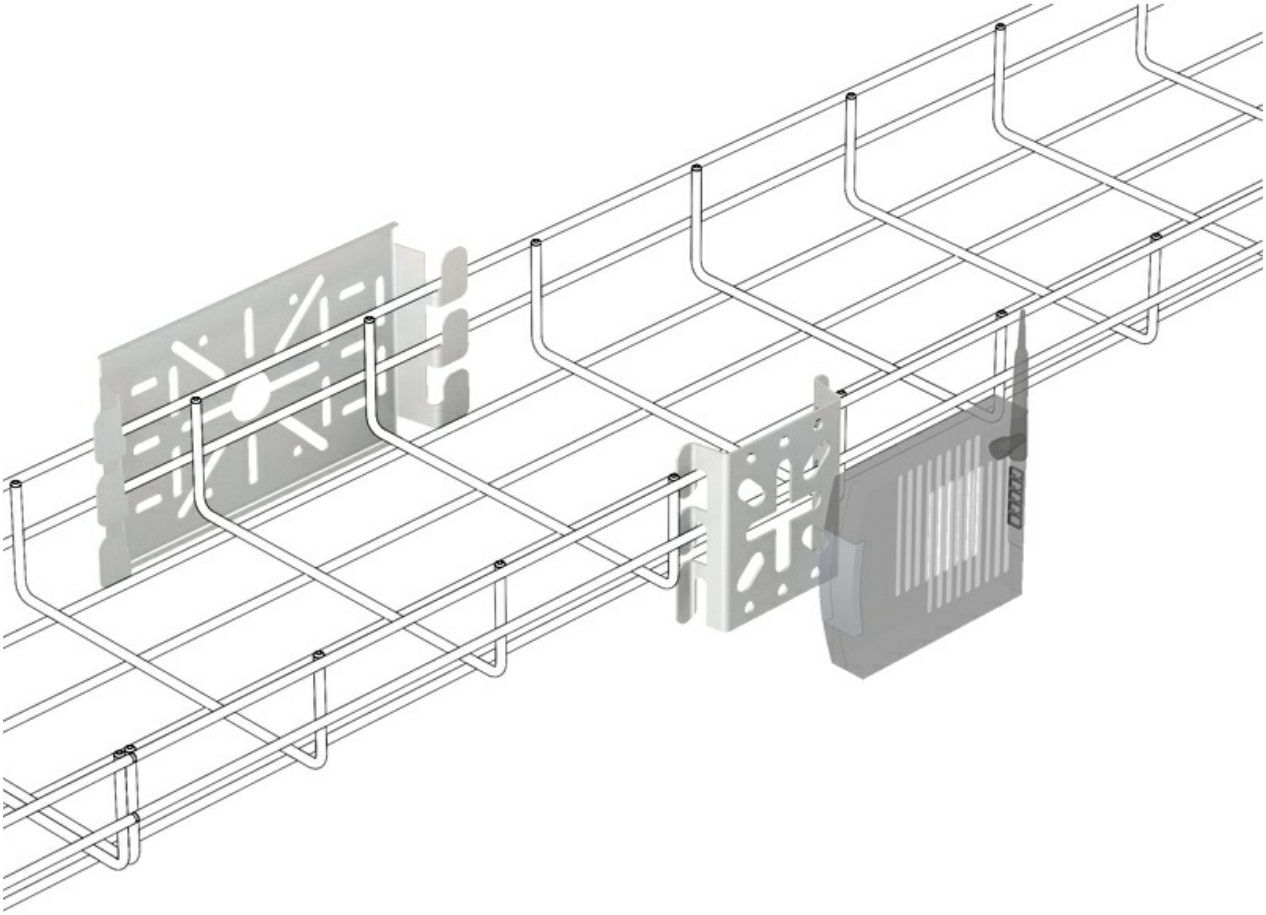



Any information included in this document is property of Pemsa®. It cannot be copied, total or partially, nor disclosed to third parties nor used without the explicit and written authorization by Pemsa®. These documents total or partially, can be subject to patent and/or be patent pending and therefore protected by intellectual and industrial property rights. Pemsa, Rejiband, Pemsaband, Inducanal, Rejitech, Megaband, Pemsaflex are registered trademarks property of "Pemsa Cable Management, S.A."

# Universal Bracket

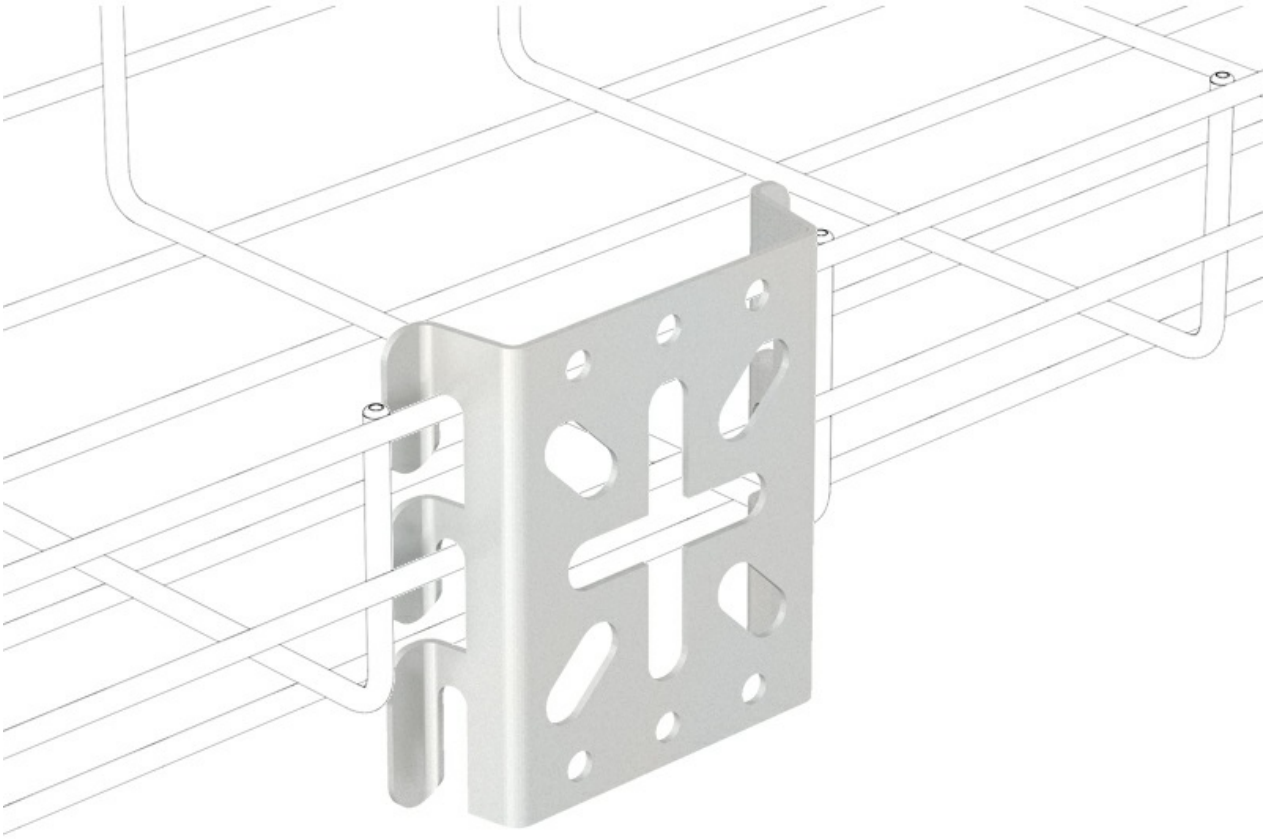



Any information included in this document is property of Pemsa®. It cannot be copied, total or partially, nor disclosed to third parties nor used without the explicit and written authorization by Pemsa®. These documents total or partially, can be subject to patent and/or be patent pending and therefore protected by intellectual and industrial property rights. Pemsa, Rejiband, Pemsaband, Inducanal, Rejitech, Megaband, Pemsaflex are registered trademarks property of "Pemsa Cable Management, S.A."

# Universal Bracket

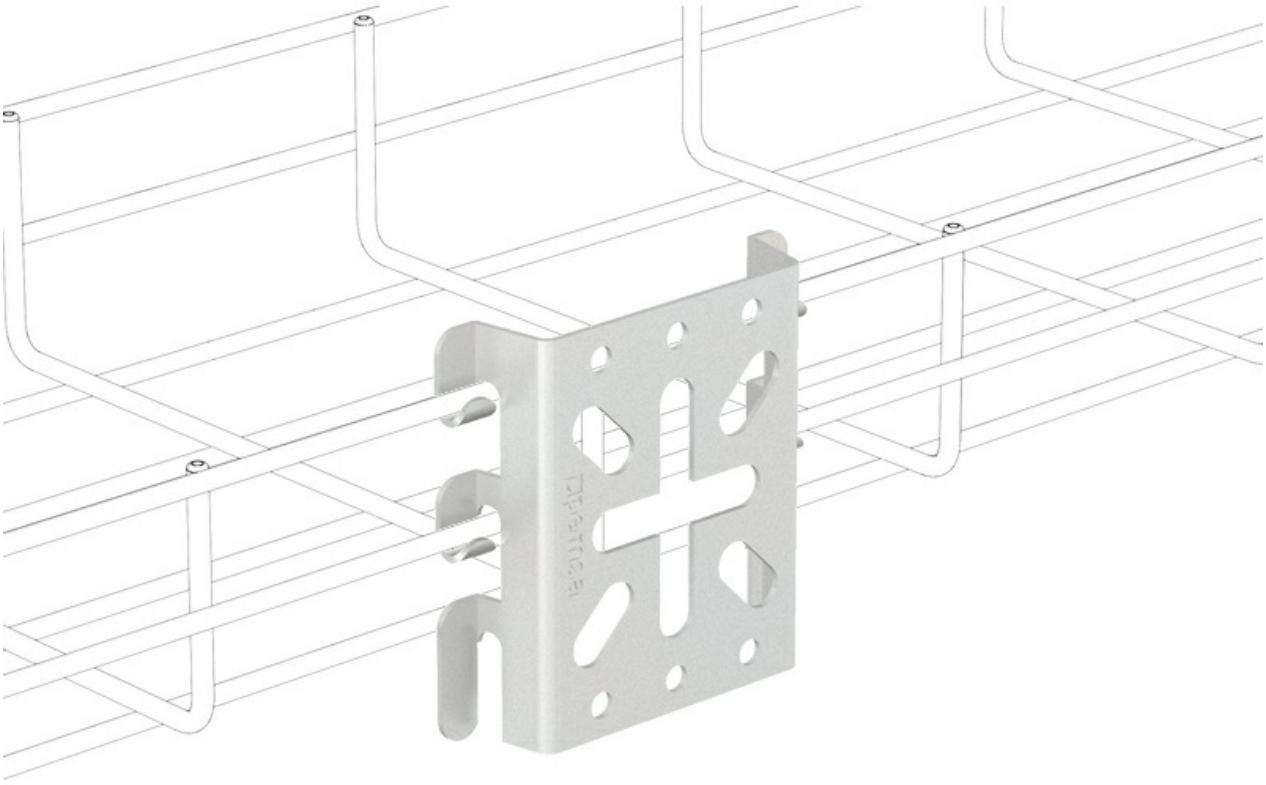



Any information included in this document is property of Pemsa®. It cannot be copied, total or partially, nor disclosed to third parties nor used without the explicit and written authorization by Pemsa®. These documents total or partially, can be subject to patent and/or be patent pending and therefore protected by intellectual and industrial property rights. Pemsa, Rejiband, Pemsaband, Inducanal, Rejitech, Megaband, Pemsaflex are registered trademarks property of "Pemsa Cable Management, S.A."

# Universal Bracket

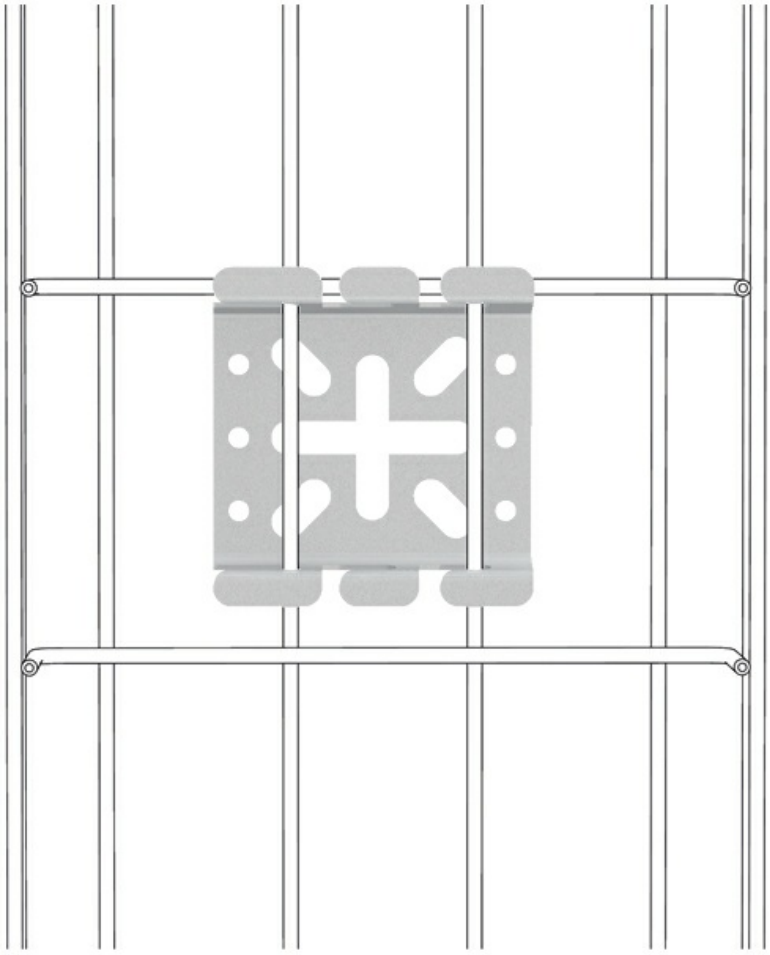



Any information included in this document is property of Pemsa®. It cannot be copied, total or partially, nor disclosed to third parties nor used without the explicit and written authorization by Pemsa®. These documents total or partially, can be subject to patent and/or be patent pending and therefore protected by intellectual and industrial property rights. Pemsa, Rejiband, Pemsaband, Inducanal, Rejitech, Megaband, Pemsaflex are registered trademarks property of "Pemsa Cable Management, S.A."