Click Divider (Ref: 67030612)



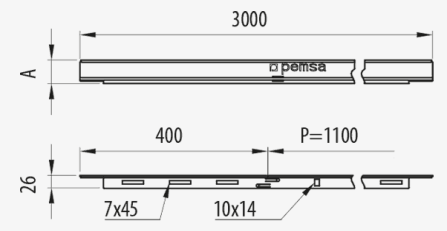

Description

Metal divider with click system for separating different types of wiring in Rejiband® and Pemsaband® trays and Megaband® ladder. Of 85 mm height, With GC protection system. Available in various heights and Protection Systems. It allows the screening between data and power cables within the same installation.

Advantages

Wide adaptability and adjustment thanks to the three heights: 25 mm, 50 mm and 80 mm.

Suitable for all Pemsa cable tray ranges.

Available in various protection systems: PG, GC, BK8, AZ+ and stainless steel AISI 304 and AISI 316L.

Encourages shielding between data and power cables within the same installation.

Significant savings in installation time when used in wire mesh trays, thanks to a faster assembly with the Click system.

Applications

Suitable to create adequate cable separation to improve and correct electromagnetic compatibility in installations of Rejiband®, Pemsaband® tray and Megaband® ladder in indoor installations in a dry atmosphere without contaminants, outdoor, industrial, marine, rural or aggressive indoor installations, environments involving sea water and industrial applications.

Solutions

Any information included in this document is property of Pemsa®. It cannot be copied, total or partially, nor disclosed to third parties nor used without the explicit and written authorization by Pemsa®. These documents total or partially, can be subject to patent and/or be patent pending and therefore protected by intellectual and industrial property rights. Pemsa, Rejiband, Pemsaband, Inducanal, Rejitech, Megaband, Pemsaflex are registered trademarks property of "Pemsa Cable Management, S.A."

Click Divider (Ref: 67030612)

Product data

ETIM 10	EC001000	**kg/u**	0,539
Huella de CO2. GWP A1-A3 (kg CO2 eq.)		**u**	36
Protection System	GC	**Material**	Steel with surface coating
Finish	HDG, Hot Dip Galvanised	**Working temperature range (°C)**	-50 / 150 °C
Resistance Class	Class 5	**Fire resistance**	A1 No combustible
Flange (mm)	85		
Length (m)	3		

Ⓢ Protection System

CU - Copper electroplated

PG - Pregalvanised

EZ - Electrogalvanised

BC - Electrogalvanised Bichromate

BK8 - High Resistance Coating

GC - Hot Dip Galvanising

INOX - Stainless Steel

PT - Polyester Paint

AL - Aluminum

LN - Brass or Nickel-plated brass

Ⓜ Insulating materials

PC+ABS - Halogen Free Polycarbonate + ABS

PVC - Polyvinyl Chloride

PP - Halogen Free Polypropylene

PA6 - Halogen Free Polyamide 6

PA12 - Halogen Free Polyamide 12

PU - Polyurethane

PE - Polyethylene

NBR - NBR rubber

PET - Thermoplastic Polyester

TPV - Thermoplastic

Any information included in this document is property of Pemsa®. It cannot be copied, total or partially, nor disclosed to third parties nor used without the explicit and written authorization by Pemsa®. These documents total or partially, can be subject to patent and/or be patent pending and therefore protected by intellectual and industrial property rights. Pemsa, Rejiband, Pemsaband, Inducanal, Rejitech, Megaband, Pemsaflex are registered trademarks property of "Pemsa Cable Management, S.A."

Click Divider (Ref: 67030612)

Product applications

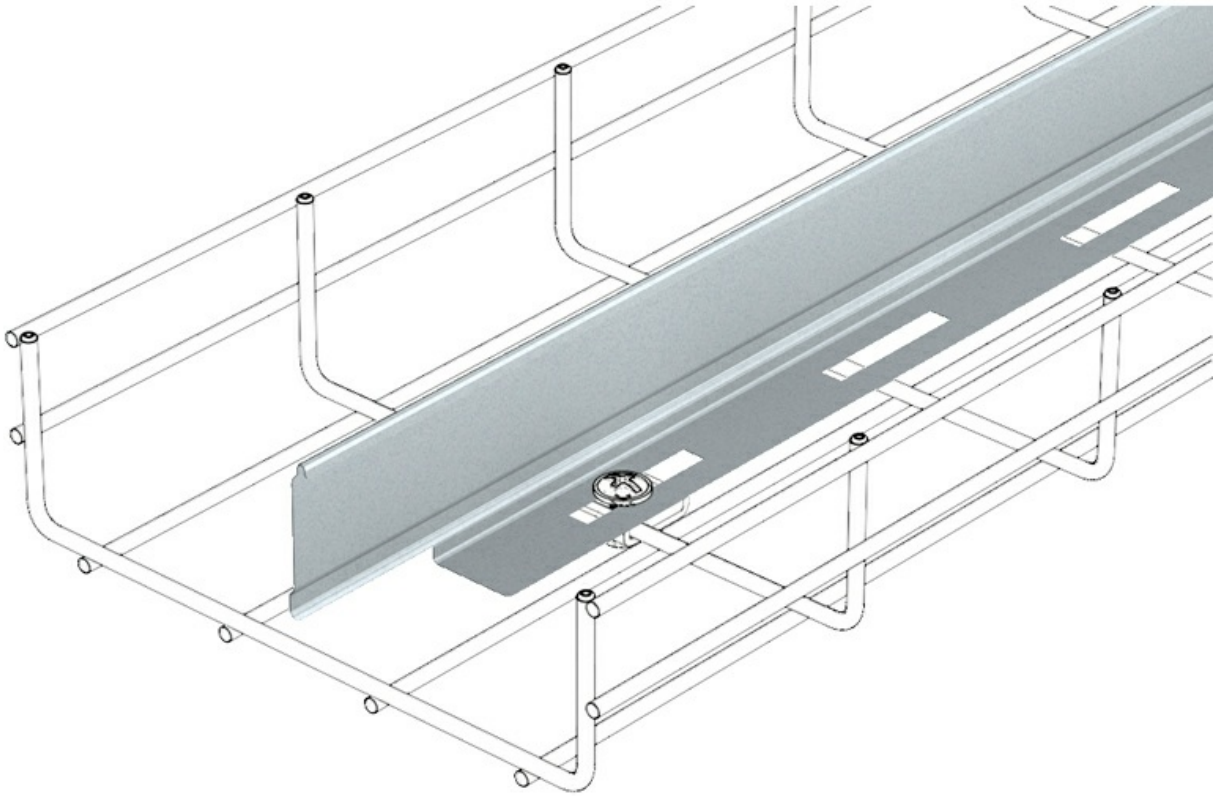

Any information included in this document is property of Pemsa®. It cannot be copied, total or partially, nor disclosed to third parties nor used without the explicit and written authorization by Pemsa®. These documents total or partially, can be subject to patent and/or be patent pending and therefore protected by intellectual and industrial property rights. Pemsa, Rejiband, Pemsaband, Inducanal, Rejitech, Megaband, Pemsaflex are registered trademarks property of "Pemsa Cable Management, S.A."

Click Divider (Ref: 67030612)

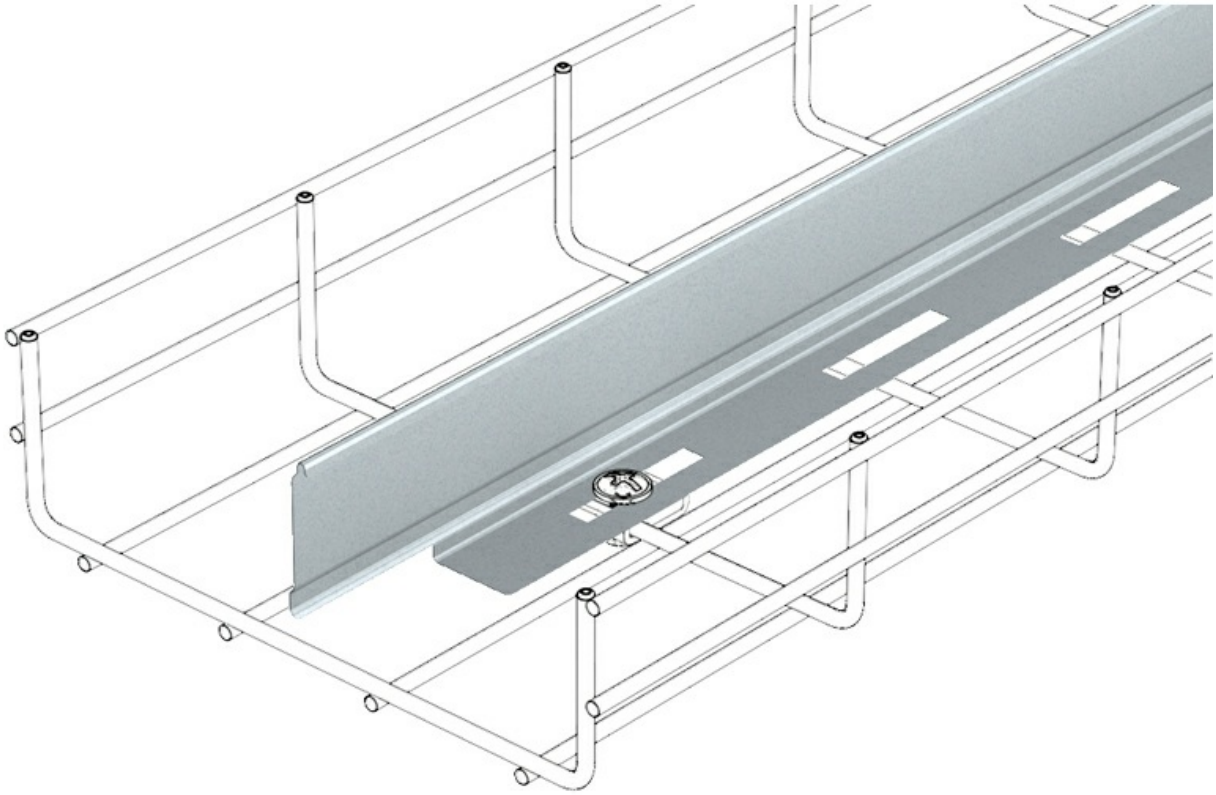

Any information included in this document is property of Pemsa®. It cannot be copied, total or partially, nor disclosed to third parties nor used without the explicit and written authorization by Pemsa®. These documents total or partially, can be subject to patent and/or be patent pending and therefore protected by intellectual and industrial property rights. Pemsa, Rejiband, Pemsaband, Inducanal, Rejitech, Megaband, Pemsaflex are registered trademarks property of "Pemsa Cable Management, S.A."

Click Divider (Ref: 67030612)

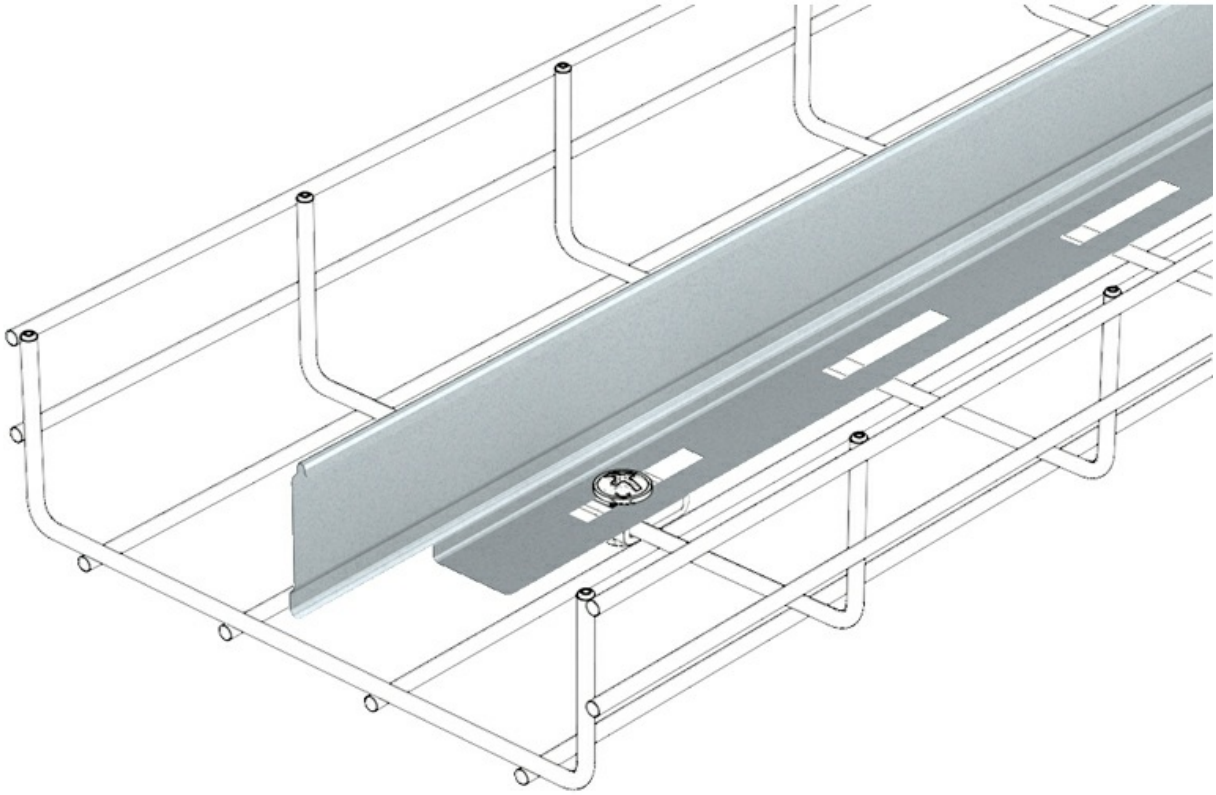

Any information included in this document is property of Pemsa®. It cannot be copied, total or partially, nor disclosed to third parties nor used without the explicit and written authorization by Pemsa®. These documents total or partially, can be subject to patent and/or be patent pending and therefore protected by intellectual and industrial property rights. Pemsa, Rejiband, Pemsaband, Inducanal, Rejitech, Megaband, Pemsaflex are registered trademarks property of "Pemsa Cable Management, S.A."

Click Divider (Ref: 67030612)

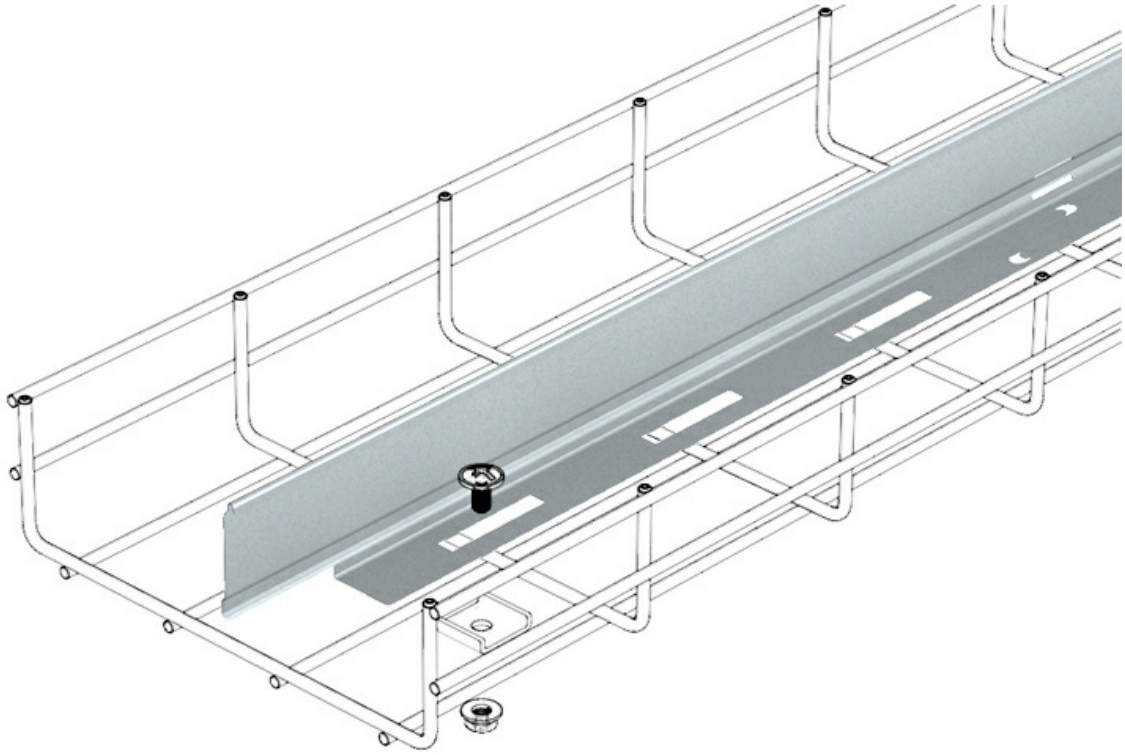

Any information included in this document is property of Pemsa®. It cannot be copied, total or partially, nor disclosed to third parties nor used without the explicit and written authorization by Pemsa®. These documents total or partially, can be subject to patent and/or be patent pending and therefore protected by intellectual and industrial property rights. Pemsa, Rejiband, Pemsaband, Inducanal, Rejitech, Megaband, Pemsaflex are registered trademarks property of "Pemsa Cable Management, S.A."

Click Divider (Ref: 67030612)

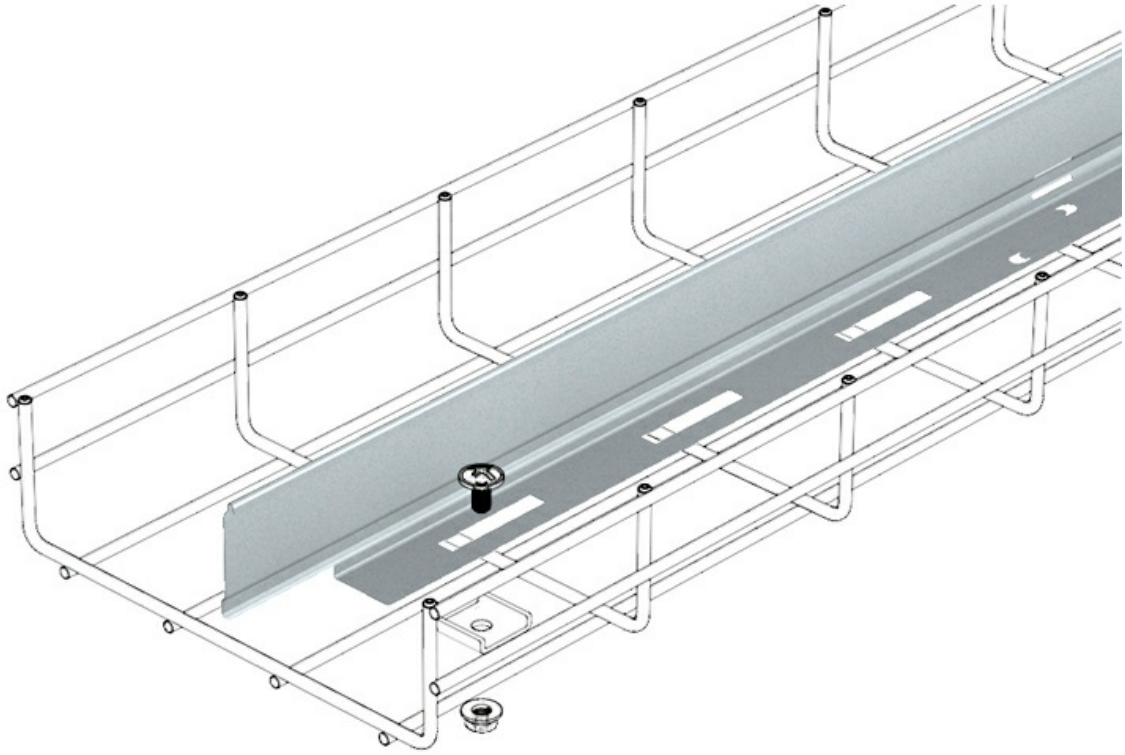

Any information included in this document is property of Pemsa®. It cannot be copied, total or partially, nor disclosed to third parties nor used without the explicit and written authorization by Pemsa®. These documents total or partially, can be subject to patent and/or be patent pending and therefore protected by intellectual and industrial property rights. Pemsa, Rejiband, Pemsaband, Inducanal, Rejitech, Megaband, Pemsaflex are registered trademarks property of "Pemsa Cable Management, S.A."

Click Divider (Ref: 67030612)

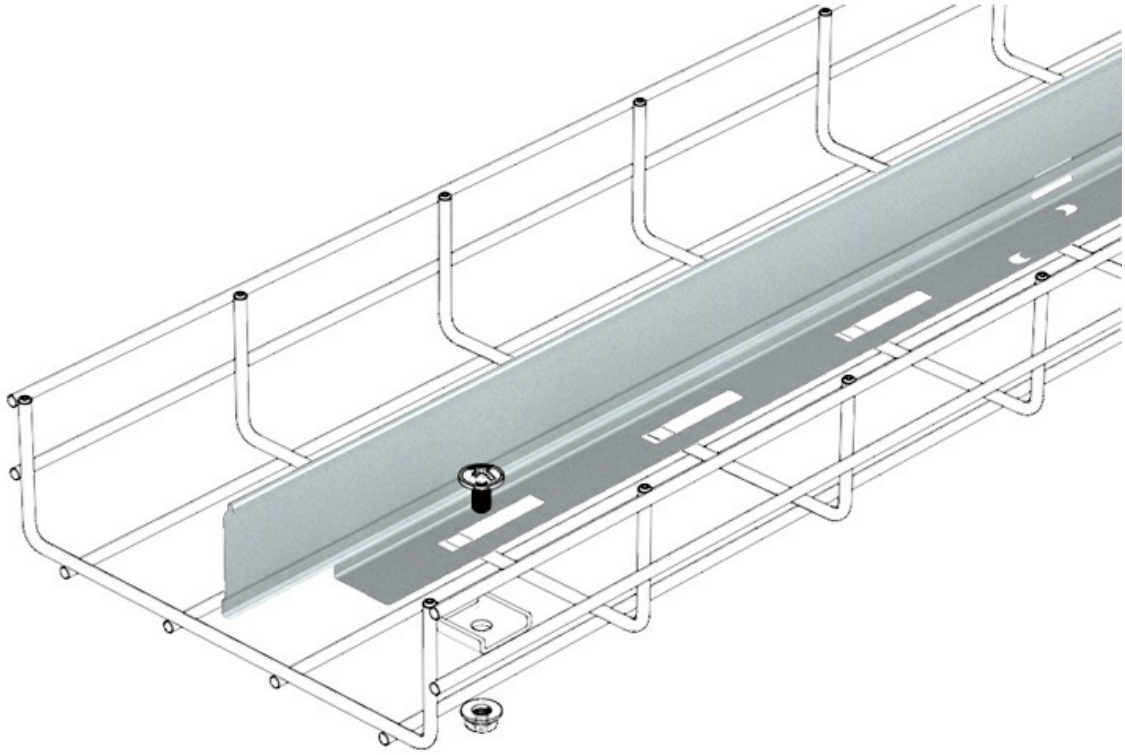

Any information included in this document is property of Pemsa®. It cannot be copied, total or partially, nor disclosed to third parties nor used without the explicit and written authorization by Pemsa®. These documents total or partially, can be subject to patent and/or be patent pending and therefore protected by intellectual and industrial property rights. Pemsa, Rejiband, Pemsaband, Inducanal, Rejitech, Megaband, Pemsaflex are registered trademarks property of "Pemsa Cable Management, S.A."

Click Divider (Ref: 67030612)

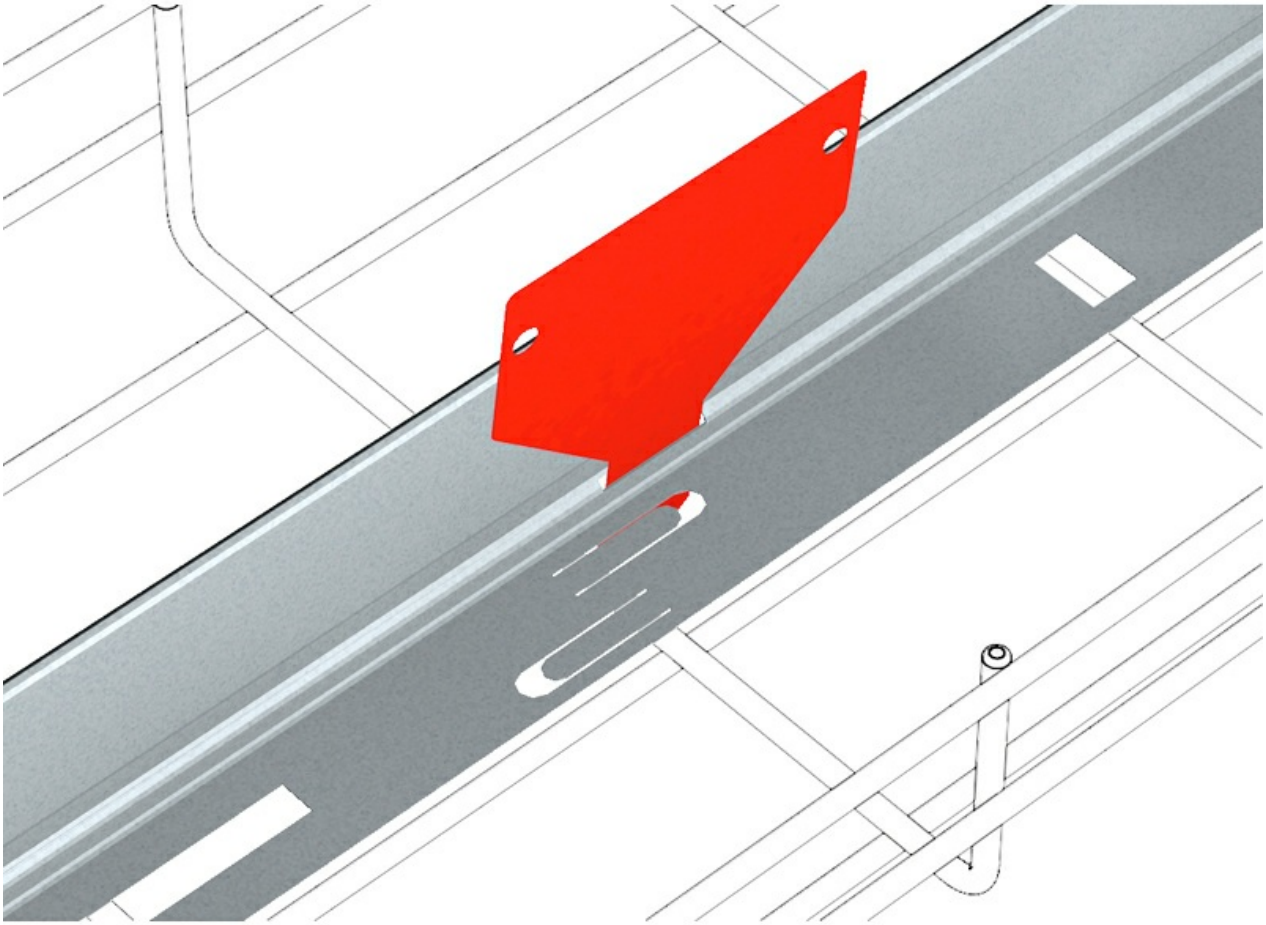

Any information included in this document is property of Pemsa®. It cannot be copied, total or partially, nor disclosed to third parties nor used without the explicit and written authorization by Pemsa®. These documents total or partially, can be subject to patent and/or be patent pending and therefore protected by intellectual and industrial property rights. Pemsa, Rejiband, Pemsaband, Inducanal, Rejitech, Megaband, Pemsaflex are registered trademarks property of "Pemsa Cable Management, S.A."

Click Divider (Ref: 67030612)

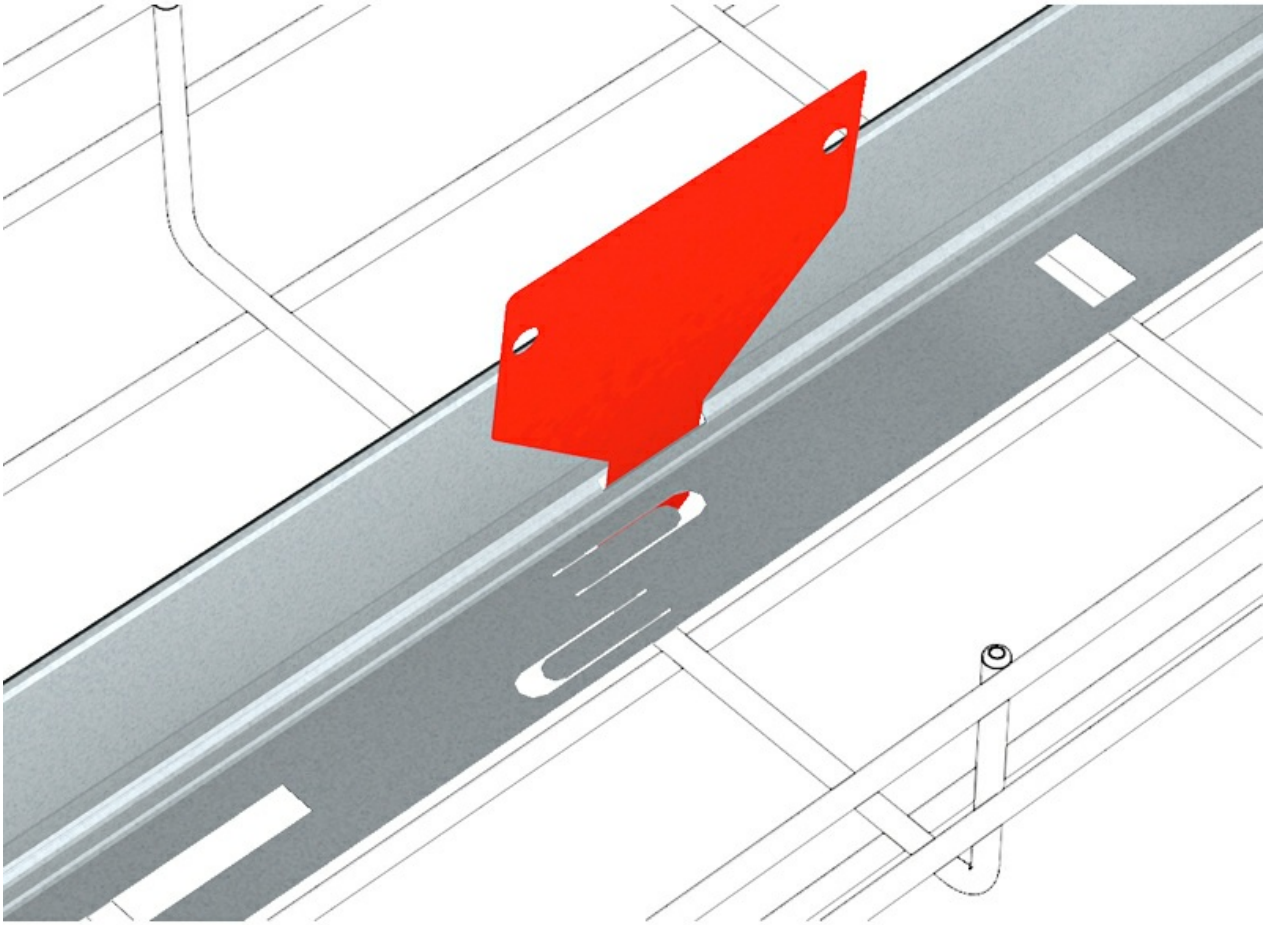

Any information included in this document is property of Pemsa®. It cannot be copied, total or partially, nor disclosed to third parties nor used without the explicit and written authorization by Pemsa®. These documents total or partially, can be subject to patent and/or be patent pending and therefore protected by intellectual and industrial property rights. Pemsa, Rejiband, Pemsaband, Inducanal, Rejitech, Megaband, Pemsaflex are registered trademarks property of "Pemsa Cable Management, S.A."

Click Divider (Ref: 67030612)

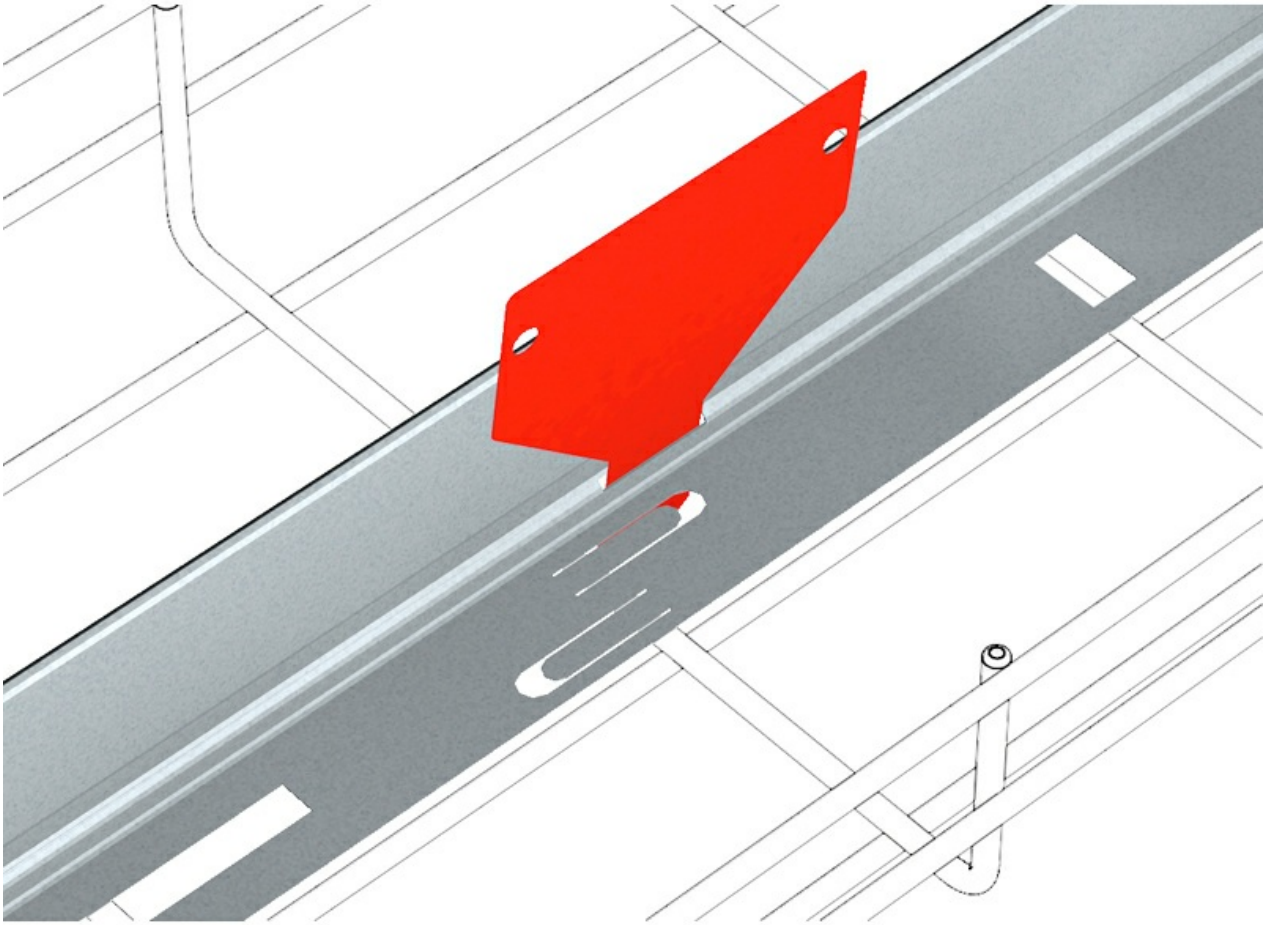

Any information included in this document is property of Pemsa®. It cannot be copied, total or partially, nor disclosed to third parties nor used without the explicit and written authorization by Pemsa®. These documents total or partially, can be subject to patent and/or be patent pending and therefore protected by intellectual and industrial property rights. Pemsa, Rejiband, Pemsaband, Inducanal, Rejitech, Megaband, Pemsaflex are registered trademarks property of "Pemsa Cable Management, S.A."

Click Divider (Ref: 67030612)



Any information included in this document is property of Pemsa®. It cannot be copied, total or partially, nor disclosed to third parties nor used without the explicit and written authorization by Pemsa®. These documents total or partially, can be subject to patent and/or be patent pending and therefore protected by intellectual and industrial property rights. Pemsa, Rejiband, Pemsaband, Inducanal, Rejitech, Megaband, Pemsaflex are registered trademarks property of "Pemsa Cable Management, S.A."

Click Divider (Ref: 67030612)



Any information included in this document is property of Pemsa®. It cannot be copied, total or partially, nor disclosed to third parties nor used without the explicit and written authorization by Pemsa®. These documents total or partially, can be subject to patent and/or be patent pending and therefore protected by intellectual and industrial property rights. Pemsa, Rejiband, Pemsaband, Inducanal, Rejitech, Megaband, Pemsaflex are registered trademarks property of "Pemsa Cable Management, S.A."

Click Divider (Ref: 67030612)



Any information included in this document is property of Pemsa®. It cannot be copied, total or partially, nor disclosed to third parties nor used without the explicit and written authorization by Pemsa®. These documents total or partially, can be subject to patent and/or be patent pending and therefore protected by intellectual and industrial property rights. Pemsa, Rejiband, Pemsaband, Inducanal, Rejitech, Megaband, Pemsaflex are registered trademarks property of "Pemsa Cable Management, S.A."

Click Divider (Ref: 67030612)

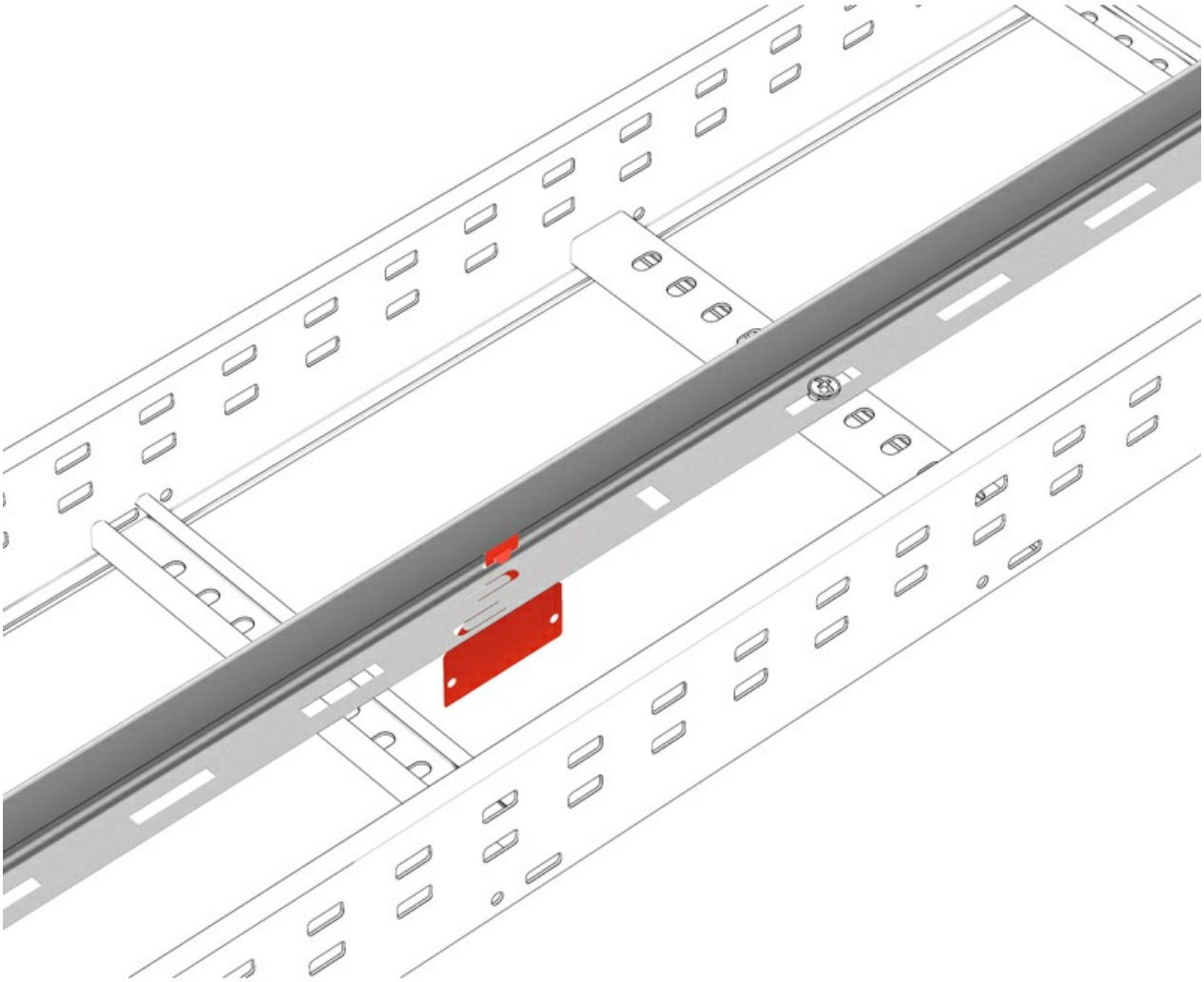

Any information included in this document is property of Pemsa®. It cannot be copied, total or partially, nor disclosed to third parties nor used without the explicit and written authorization by Pemsa®. These documents total or partially, can be subject to patent and/or be patent pending and therefore protected by intellectual and industrial property rights. Pemsa, Rejiband, Pemsaband, Inducanal, Rejitech, Megaband, Pemsaflex are registered trademarks property of "Pemsa Cable Management, S.A."

Click Divider (Ref: 67030612)

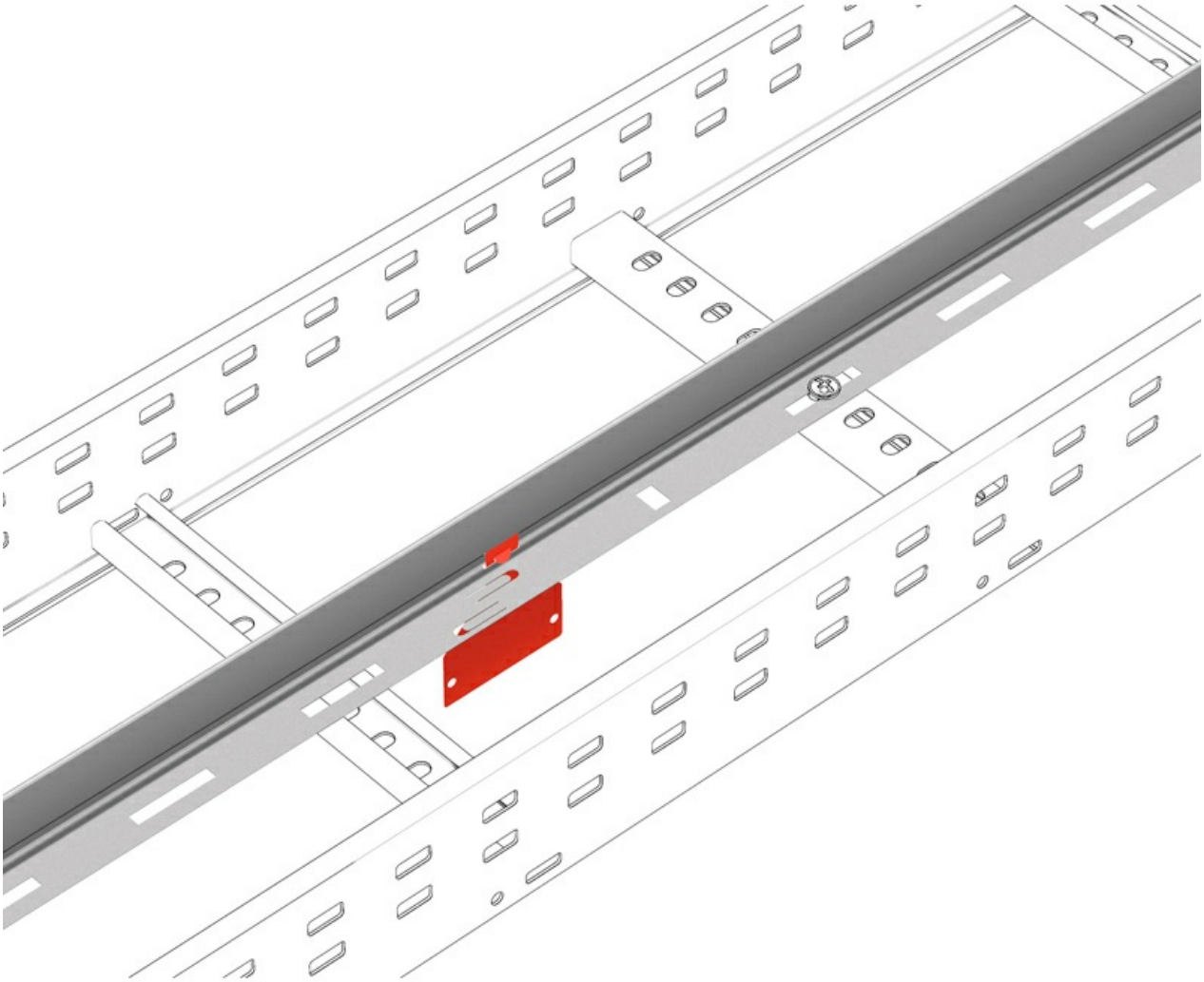

Any information included in this document is property of Pemsa®. It cannot be copied, total or partially, nor disclosed to third parties nor used without the explicit and written authorization by Pemsa®. These documents total or partially, can be subject to patent and/or be patent pending and therefore protected by intellectual and industrial property rights. Pemsa, Rejiband, Pemsaband, Inducanal, Rejitech, Megaband, Pemsaflex are registered trademarks property of "Pemsa Cable Management, S.A."

Click Divider (Ref: 67030612)

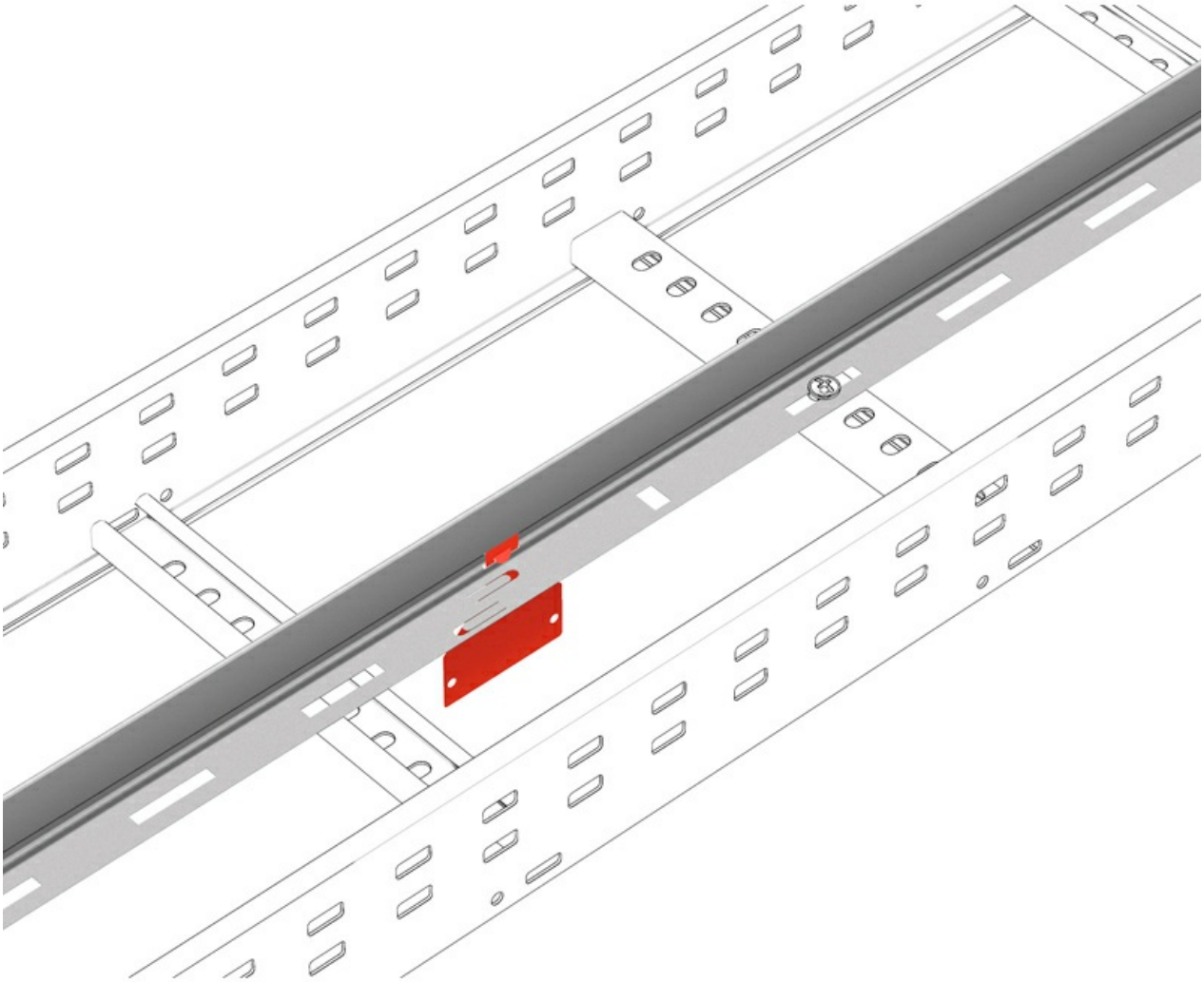

Any information included in this document is property of Pemsa®. It cannot be copied, total or partially, nor disclosed to third parties nor used without the explicit and written authorization by Pemsa®. These documents total or partially, can be subject to patent and/or be patent pending and therefore protected by intellectual and industrial property rights. Pemsa, Rejiband, Pemsaband, Inducanal, Rejitech, Megaband, Pemsaflex are registered trademarks property of "Pemsa Cable Management, S.A."