Cover (Ref: 73061200)



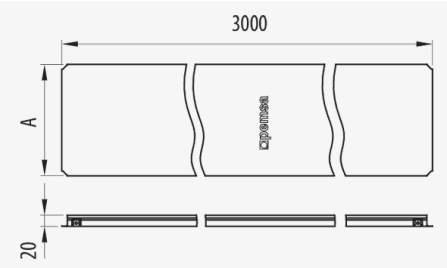

Description

Solid metal cover designed to protect the straight sections of the Rejiband® wire mesh trays, Pemsaband® One, and Megaband® ladder. Width 200 mm, With INOX protection system, I316L finish. Snap fit mounting without the need of screws or fixings. It has an extended overlap at the end that improves the coupling and sealing of two straight sections of cover. Made of steel and available in various Protection Systems and sizes.

Advantages

It has a locking clip at the ends and a hole for a screw connection to close the cover so that it can only be opened with a tool

Available in various protection systems: PG, GC, BK8, AZ+ and stainless steel AISI 304 and AISI 316L.

Optimum adjustment on the metal trays giving them a greater protection.

Snap fit installation without any fixings.

If the cover is combined with the sheet metal tray, Pemsaband® One, it becomes an IP2X protected channel for perforated version and and IP4X for solid version

Applications

Recommended for the protection of electrical and telecommunications wiring housed in Rejiband®, Pemsaband® and Megaband® trays in electrical and telecommunications installations in public buildings, infrastructure and civil works, industrial installation or tertiary sector.

Solutions

Any information included in this document is property of Pemsa®. It cannot be copied, total or partially, nor disclosed to third parties nor used without the explicit and written authorization by Pemsa®. These documents total or partially, can be subject to patent and/or be patent pending and therefore protected by intellectual and industrial property rights. Pemsa, Rejiband, Pemsaband, Inducanal, Rejitech, Megaband, Pemsaflex are registered trademarks property of "Pemsa Cable Management, S.A."

Cover (Ref: 73061200)

Product data

ETIM 10	EC002403	**u**	12
Huella de CO2. GWP A1-A3 (kg CO2 eq.)		**Material**	Acero inoxidable AISI 316L
Protection System	INOX	**IP**	IP44
Finish	Stainless Steel AISI 316L	**Working temperature range (°C)**	-50 / 150 ºC
Resistance Class	Class 9D	**Fire resistance**	A1 No combustible
Width (mm)	200		
Length (m)	3		
kg/u	0,947		

Ⓢ Protection System

CU - Copper electroplated

PG - Pregalvanised

EZ - Electrogalvanised

BC - Electrogalvanised Bichromate

BK8 - High Resistance Coating

GC - Hot Dip Galvanising

INOX - Stainless Steel

PT - Polyester Paint

AL - Aluminum

LN - Brass or Nickel-plated brass

Ⓜ Insulating materials

PC+ABS - Halogen Free Polycarbonate + ABS

PVC - Polyvinyl Chloride

PP - Halogen Free Polypropylene

PA6 - Halogen Free Polyamide 6

PA12 - Halogen Free Polyamide 12

PU - Polyurethane

PE - Polyethylene

NBR - NBR rubber

PET - Thermoplastic Polyester

TPV - Thermoplastic

Any information included in this document is property of Pemsa®. It cannot be copied, total or partially, nor disclosed to third parties nor used without the explicit and written authorization by Pemsa®. These documents total or partially, can be subject to patent and/or be patent pending and therefore protected by intellectual and industrial property rights. Pemsa, Rejiband, Pemsaband, Inducanal, Rejitech, Megaband, Pemsaflex are registered trademarks property of "Pemsa Cable Management, S.A."

Cover (Ref: 73061200)

Product applications

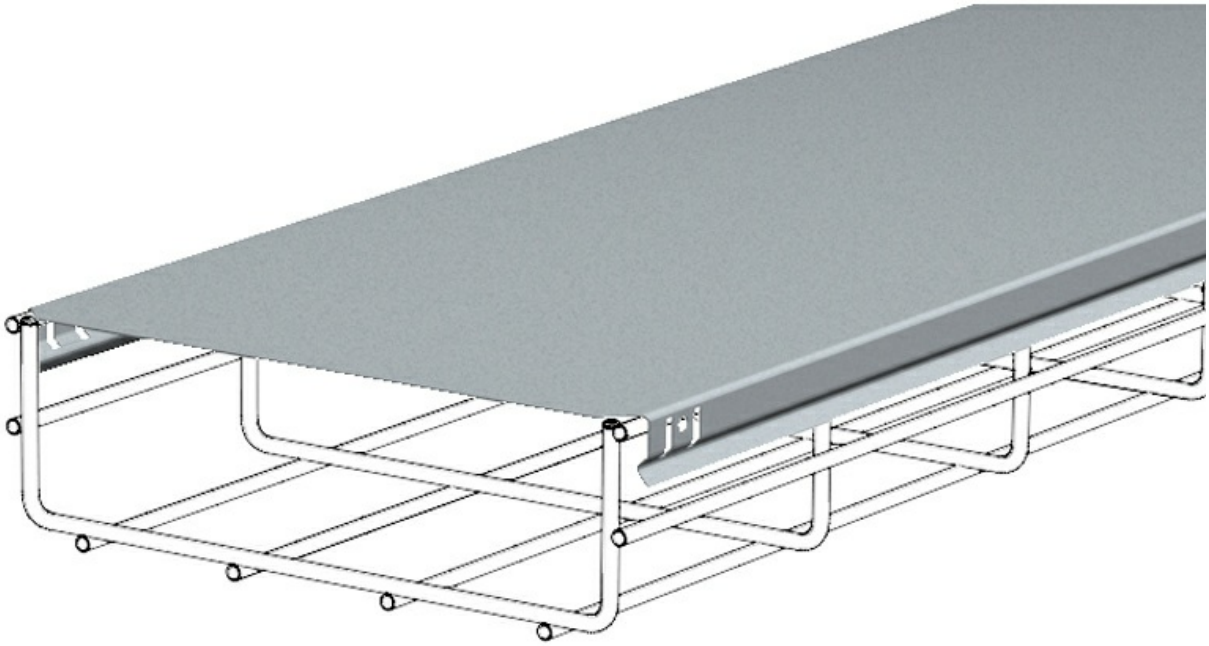

Any information included in this document is property of Pemsa®. It cannot be copied, total or partially, nor disclosed to third parties nor used without the explicit and written authorization by Pemsa®. These documents total or partially, can be subject to patent and/or be patent pending and therefore protected by intellectual and industrial property rights. Pemsa, Rejiband, Pemsaband, Inducanal, Rejitech, Megaband, Pemsaflex are registered trademarks property of "Pemsa Cable Management, S.A."

Cover (Ref: 73061200)

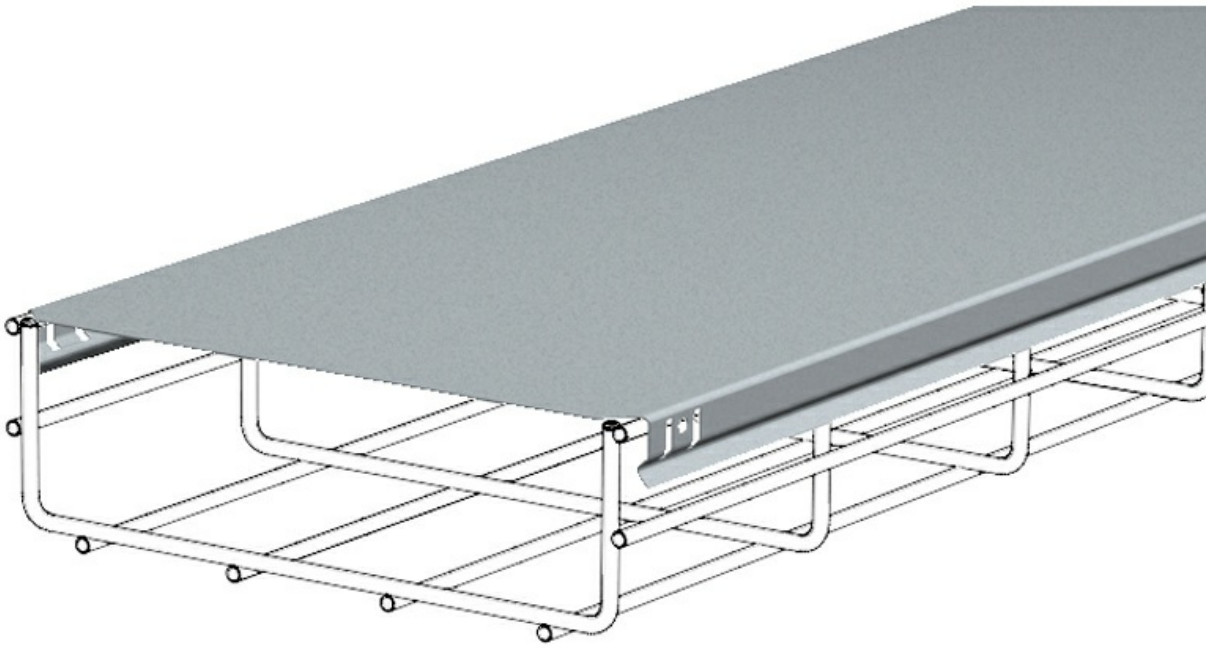

Any information included in this document is property of Pemsa®. It cannot be copied, total or partially, nor disclosed to third parties nor used without the explicit and written authorization by Pemsa®. These documents total or partially, can be subject to patent and/or be patent pending and therefore protected by intellectual and industrial property rights. Pemsa, Rejiband, Pemsaband, Inducanal, Rejitech, Megaband, Pemsaflex are registered trademarks property of "Pemsa Cable Management, S.A."

Cover (Ref: 73061200)

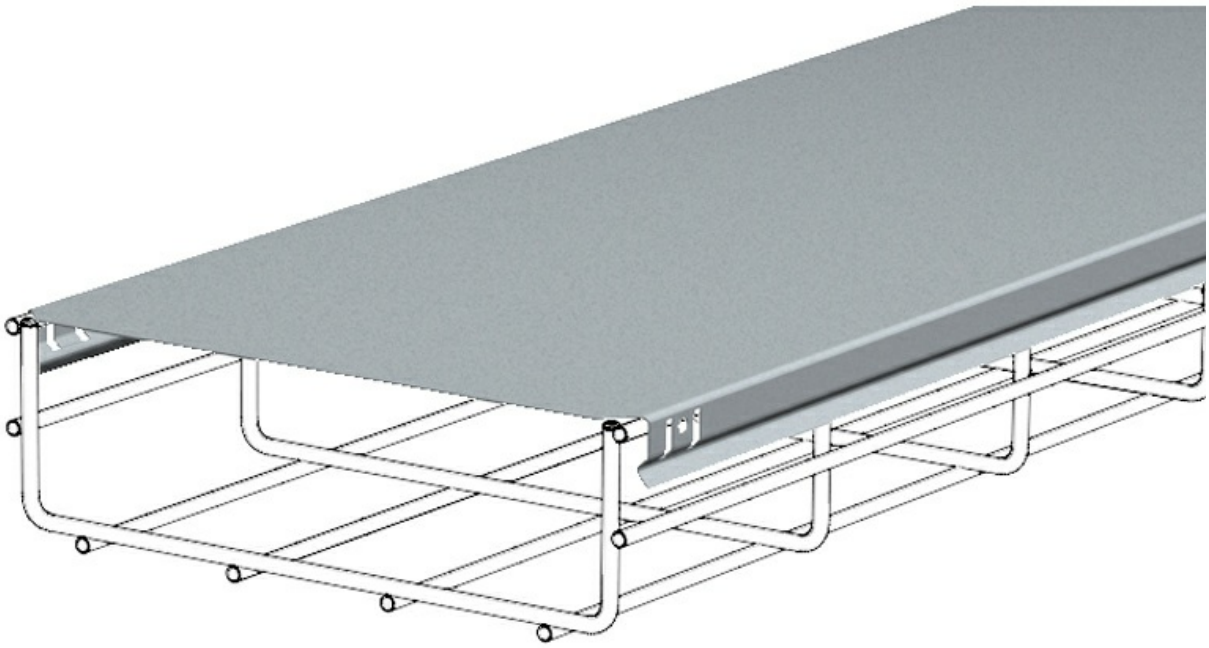

Any information included in this document is property of Pemsa®. It cannot be copied, total or partially, nor disclosed to third parties nor used without the explicit and written authorization by Pemsa®. These documents total or partially, can be subject to patent and/or be patent pending and therefore protected by intellectual and industrial property rights. Pemsa, Rejiband, Pemsaband, Inducanal, Rejitech, Megaband, Pemsaflex are registered trademarks property of "Pemsa Cable Management, S.A."

Cover (Ref: 73061200)

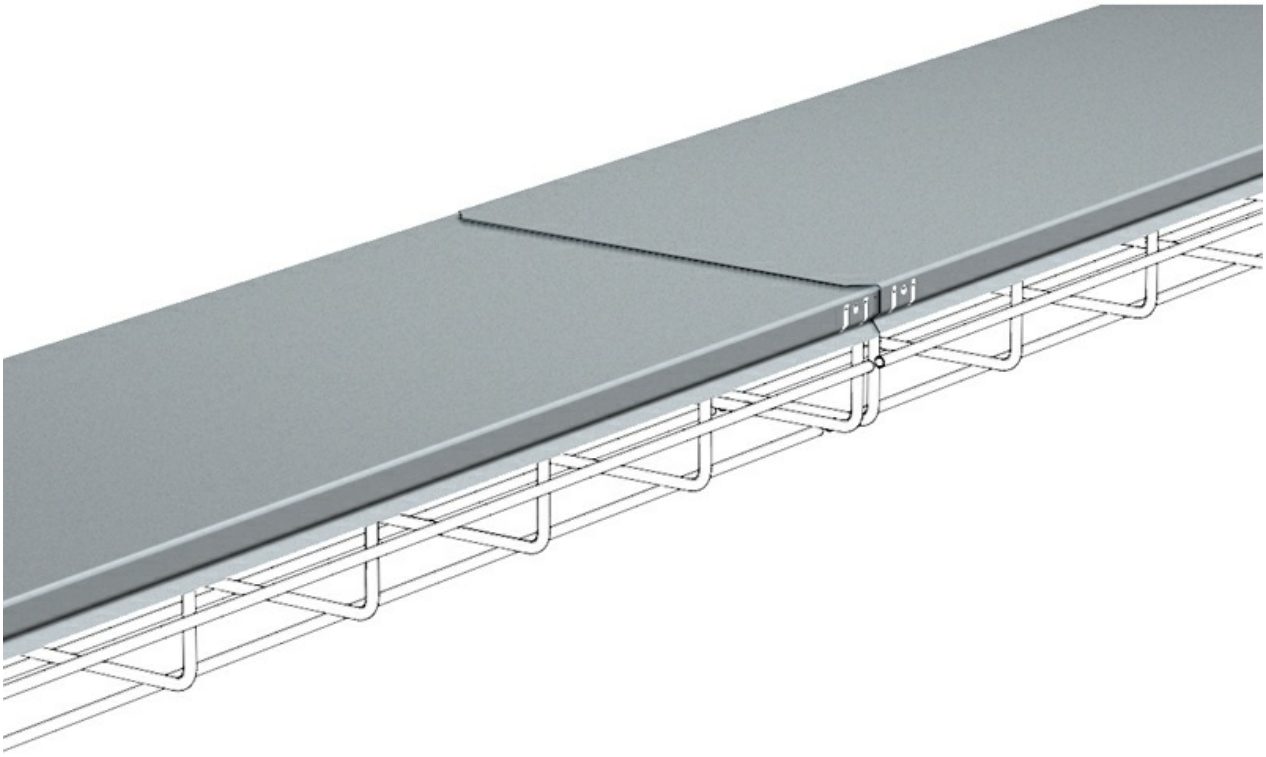

Any information included in this document is property of Pemsa®. It cannot be copied, total or partially, nor disclosed to third parties nor used without the explicit and written authorization by Pemsa®. These documents total or partially, can be subject to patent and/or be patent pending and therefore protected by intellectual and industrial property rights. Pemsa, Rejiband, Pemsaband, Inducanal, Rejitech, Megaband, Pemsaflex are registered trademarks property of "Pemsa Cable Management, S.A."

Cover (Ref: 73061200)

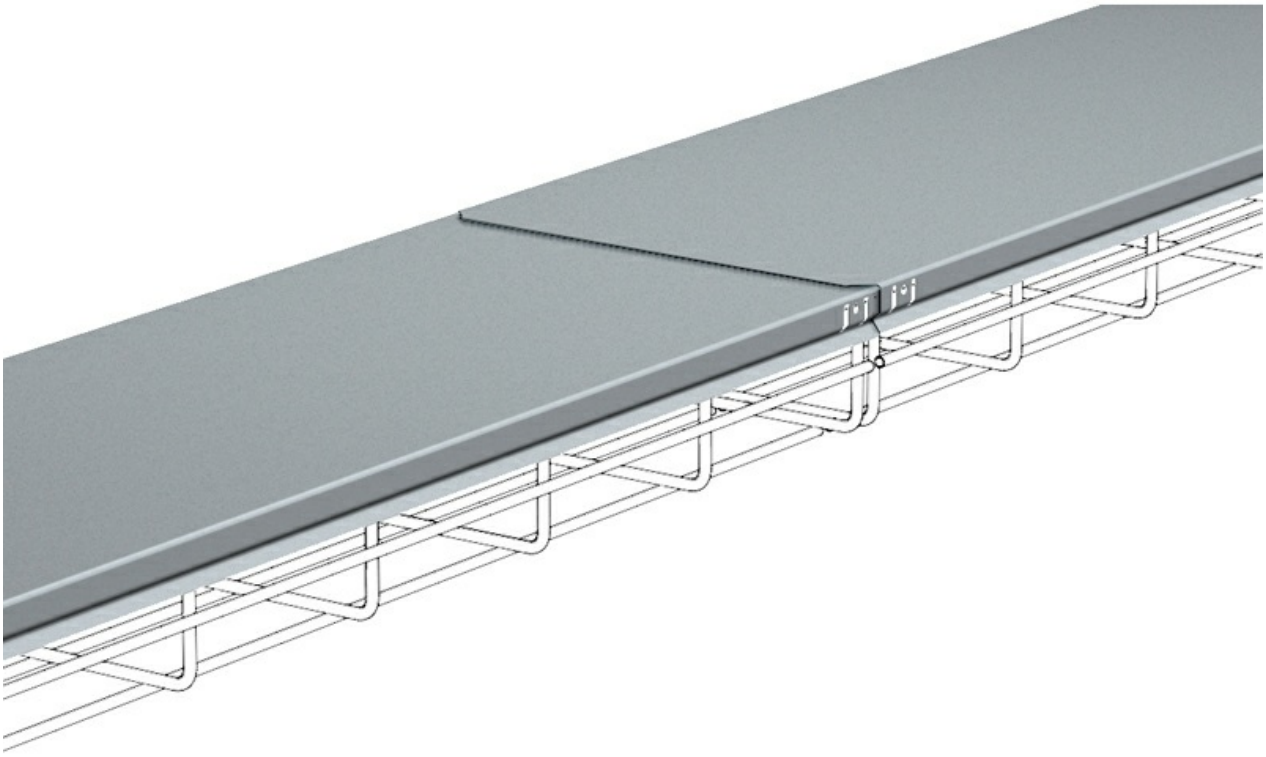

Any information included in this document is property of Pemsa®. It cannot be copied, total or partially, nor disclosed to third parties nor used without the explicit and written authorization by Pemsa®. These documents total or partially, can be subject to patent and/or be patent pending and therefore protected by intellectual and industrial property rights. Pemsa, Rejiband, Pemsaband, Inducanal, Rejitech, Megaband, Pemsaflex are registered trademarks property of "Pemsa Cable Management, S.A."

Cover (Ref: 73061200)

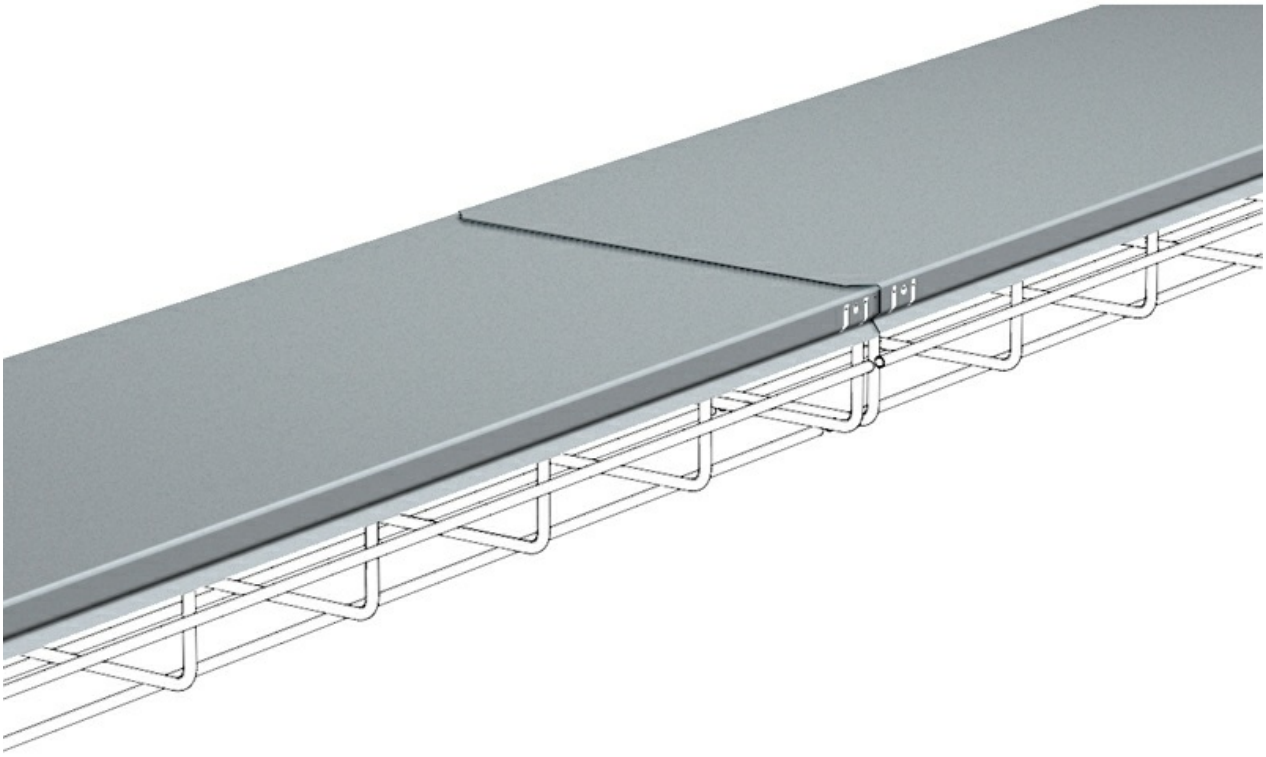

Any information included in this document is property of Pemsa®. It cannot be copied, total or partially, nor disclosed to third parties nor used without the explicit and written authorization by Pemsa®. These documents total or partially, can be subject to patent and/or be patent pending and therefore protected by intellectual and industrial property rights. Pemsa, Rejiband, Pemsaband, Inducanal, Rejitech, Megaband, Pemsaflex are registered trademarks property of "Pemsa Cable Management, S.A."

Cover (Ref: 73061200)

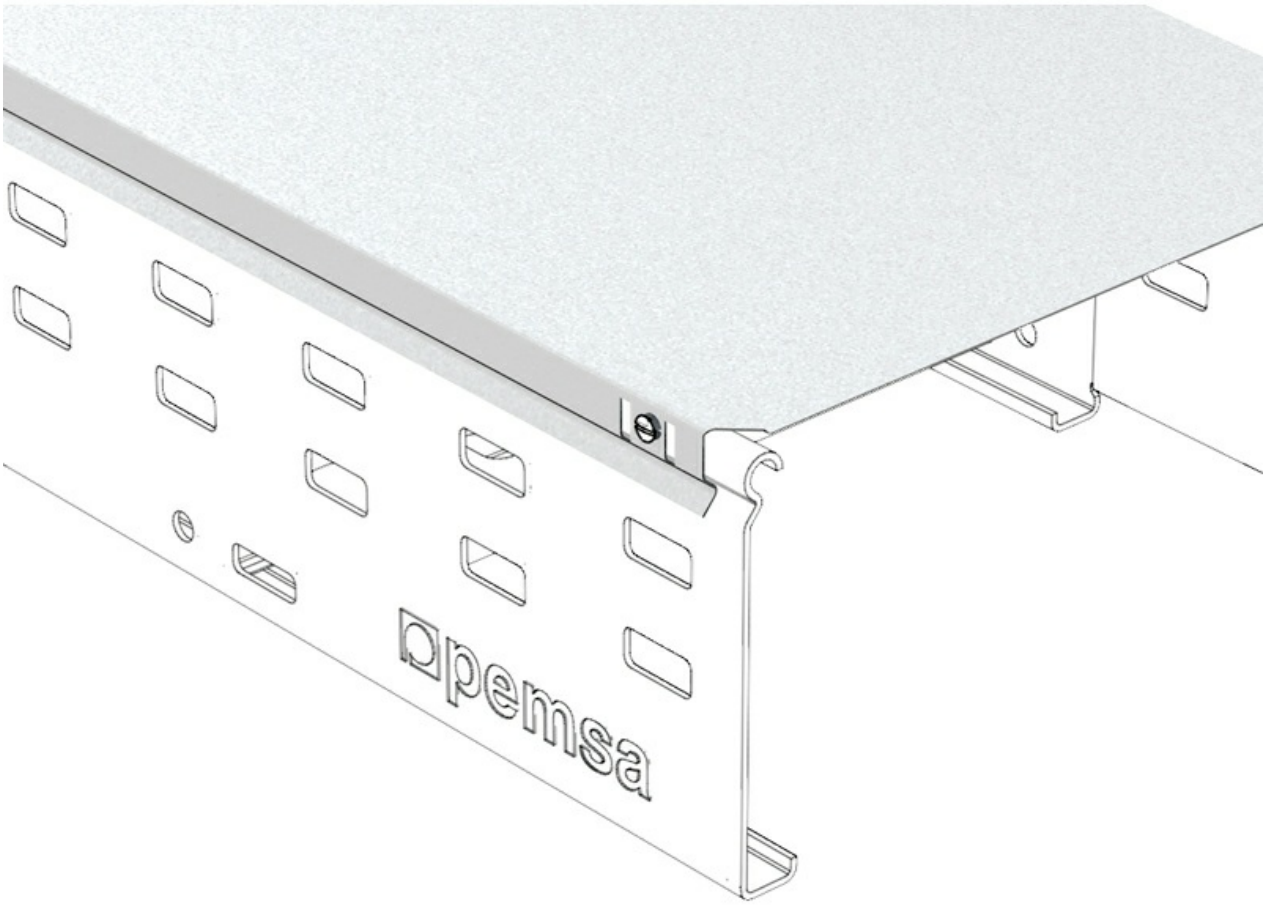

Any information included in this document is property of Pemsa®. It cannot be copied, total or partially, nor disclosed to third parties nor used without the explicit and written authorization by Pemsa®. These documents total or partially, can be subject to patent and/or be patent pending and therefore protected by intellectual and industrial property rights. Pemsa, Rejiband, Pemsaband, Inducanal, Rejitech, Megaband, Pemsaflex are registered trademarks property of "Pemsa Cable Management, S.A."

Cover (Ref: 73061200)

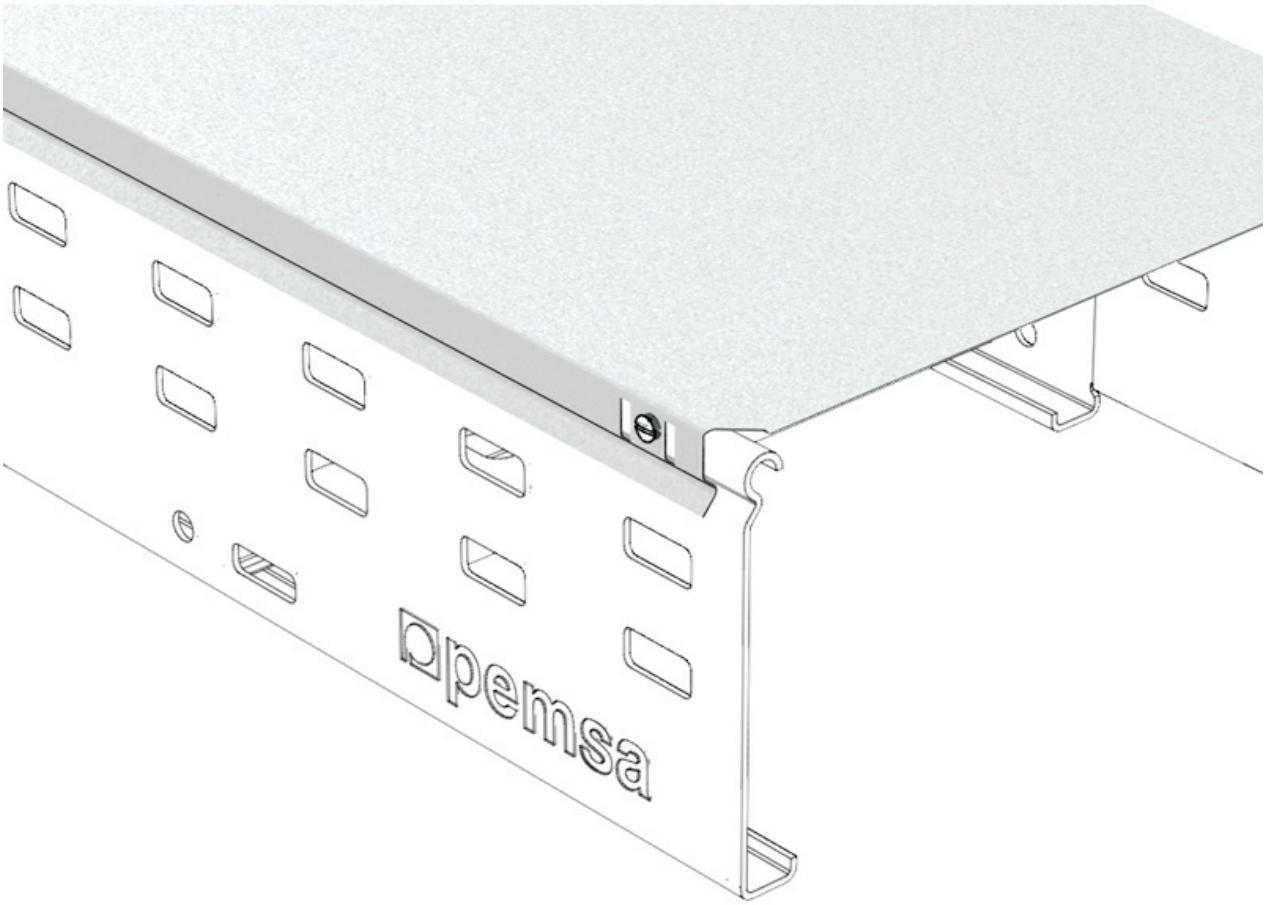

Any information included in this document is property of Pemsa®. It cannot be copied, total or partially, nor disclosed to third parties nor used without the explicit and written authorization by Pemsa®. These documents total or partially, can be subject to patent and/or be patent pending and therefore protected by intellectual and industrial property rights. Pemsa, Rejiband, Pemsaband, Inducanal, Rejitech, Megaband, Pemsaflex are registered trademarks property of "Pemsa Cable Management, S.A."

Cover (Ref: 73061200)

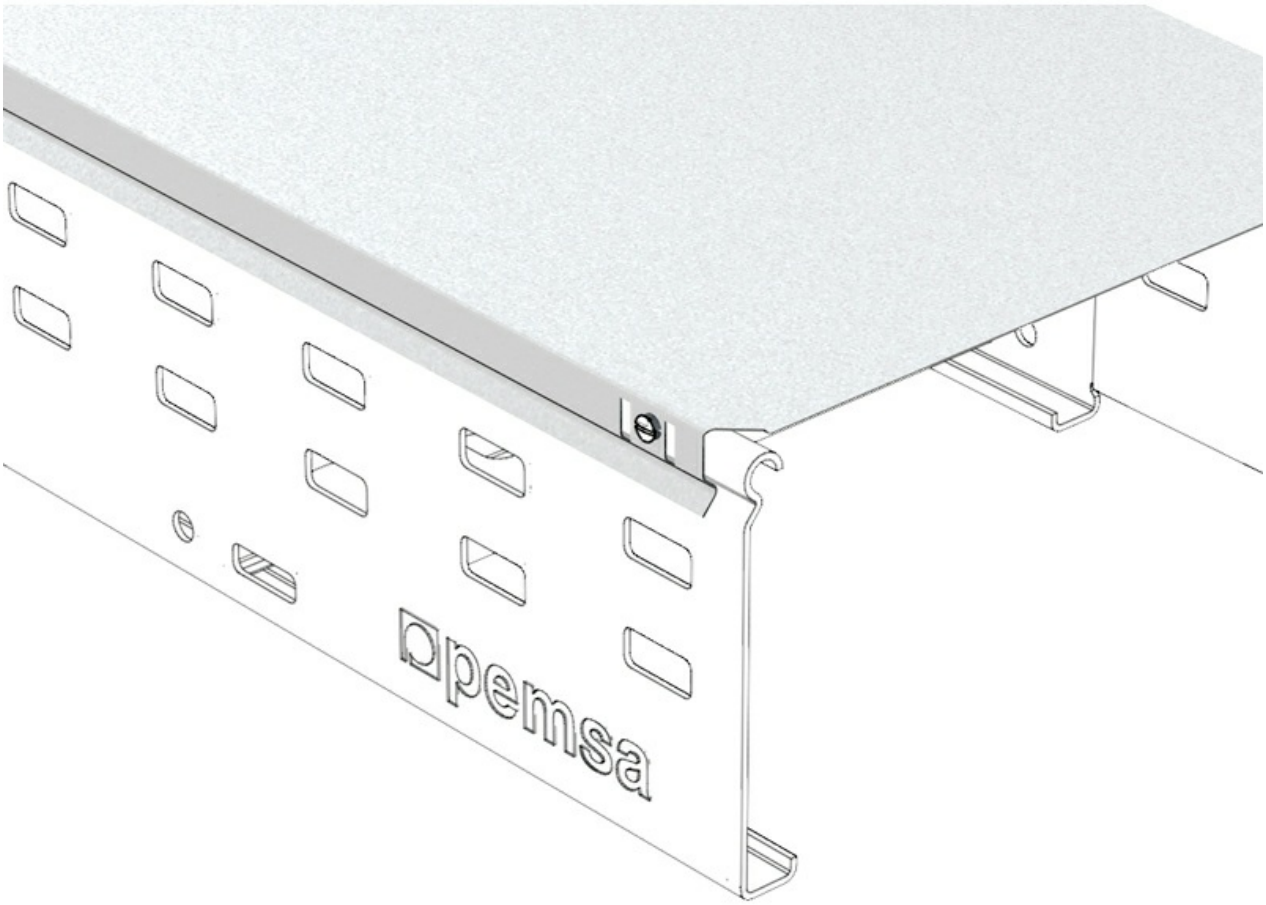

Any information included in this document is property of Pemsa®. It cannot be copied, total or partially, nor disclosed to third parties nor used without the explicit and written authorization by Pemsa®. These documents total or partially, can be subject to patent and/or be patent pending and therefore protected by intellectual and industrial property rights. Pemsa, Rejiband, Pemsaband, Inducanal, Rejitech, Megaband, Pemsaflex are registered trademarks property of "Pemsa Cable Management, S.A."

Cover (Ref: 73061200)

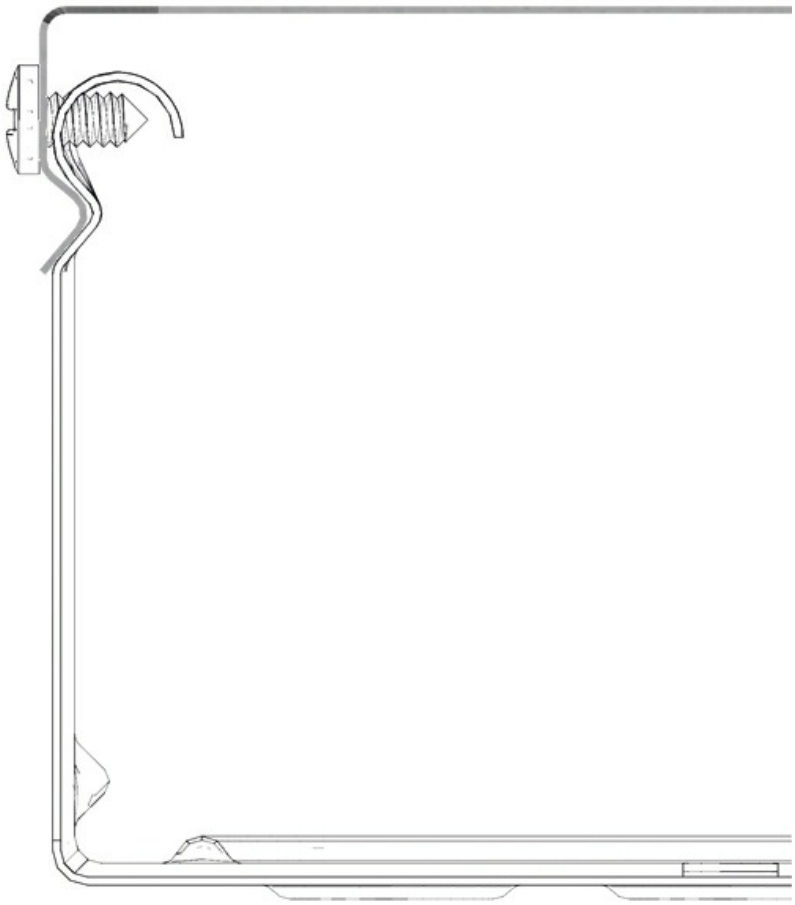

Any information included in this document is property of Pemsa®. It cannot be copied, total or partially, nor disclosed to third parties nor used without the explicit and written authorization by Pemsa®. These documents total or partially, can be subject to patent and/or be patent pending and therefore protected by intellectual and industrial property rights. Pemsa, Rejiband, Pemsaband, Inducanal, Rejitech, Megaband, Pemsaflex are registered trademarks property of "Pemsa Cable Management, S.A."

Cover (Ref: 73061200)

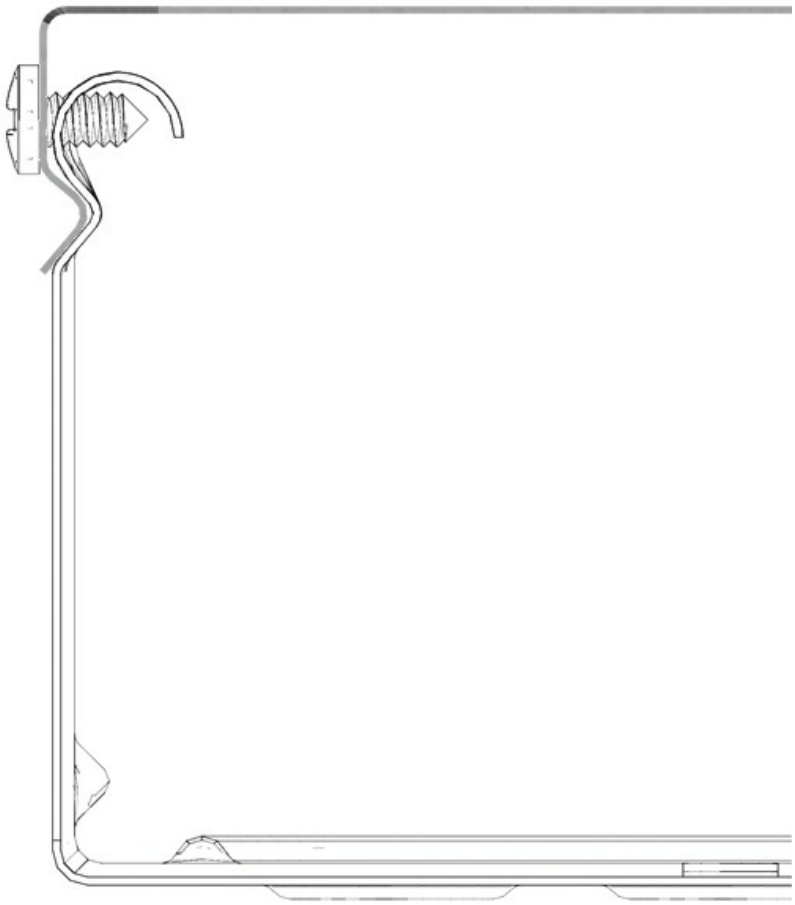

Any information included in this document is property of Pemsa®. It cannot be copied, total or partially, nor disclosed to third parties nor used without the explicit and written authorization by Pemsa®. These documents total or partially, can be subject to patent and/or be patent pending and therefore protected by intellectual and industrial property rights. Pemsa, Rejiband, Pemsaband, Inducanal, Rejitech, Megaband, Pemsaflex are registered trademarks property of "Pemsa Cable Management, S.A."

Cover (Ref: 73061200)

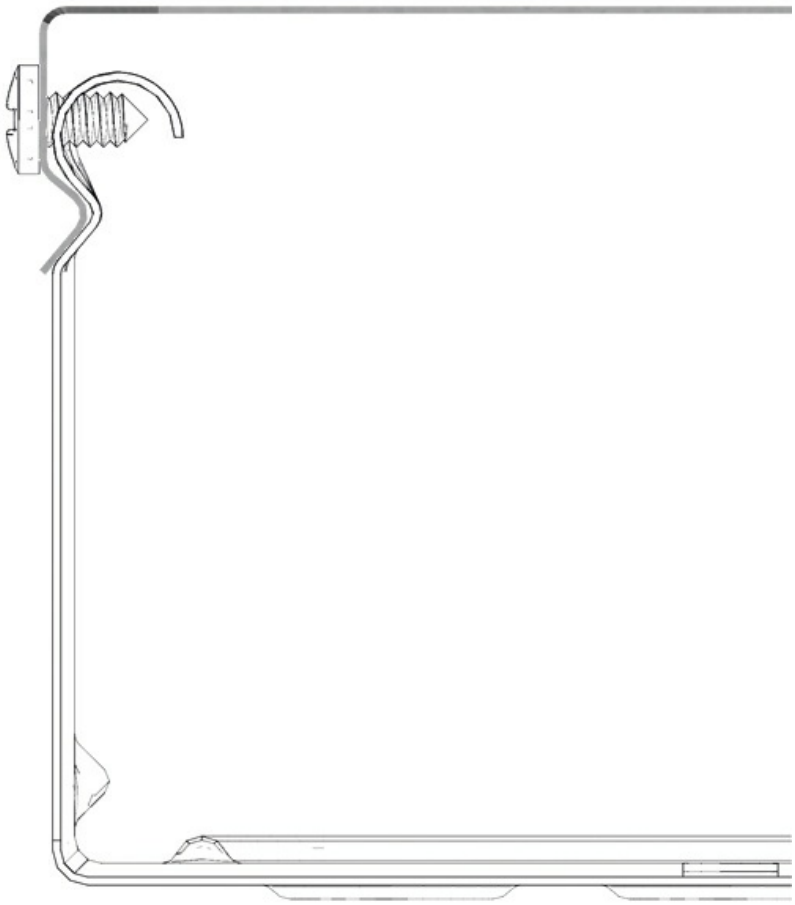

Any information included in this document is property of Pemsa®. It cannot be copied, total or partially, nor disclosed to third parties nor used without the explicit and written authorization by Pemsa®. These documents total or partially, can be subject to patent and/or be patent pending and therefore protected by intellectual and industrial property rights. Pemsa, Rejiband, Pemsaband, Inducanal, Rejitech, Megaband, Pemsaflex are registered trademarks property of "Pemsa Cable Management, S.A."

Cover (Ref: 73061200)

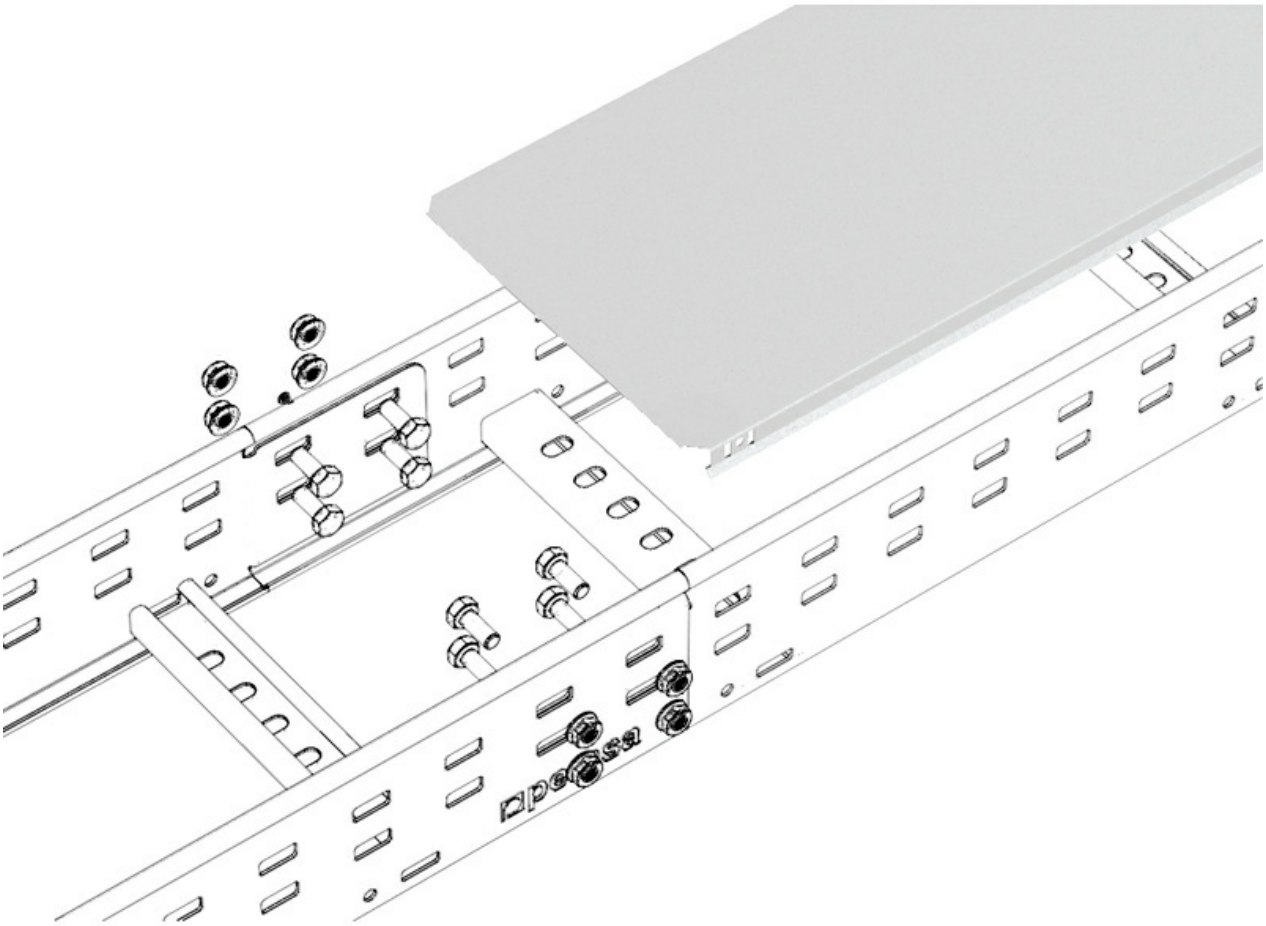

Any information included in this document is property of Pemsa®. It cannot be copied, total or partially, nor disclosed to third parties nor used without the explicit and written authorization by Pemsa®. These documents total or partially, can be subject to patent and/or be patent pending and therefore protected by intellectual and industrial property rights. Pemsa, Rejiband, Pemsaband, Inducanal, Rejitech, Megaband, Pemsaflex are registered trademarks property of "Pemsa Cable Management, S.A."

Cover (Ref: 73061200)

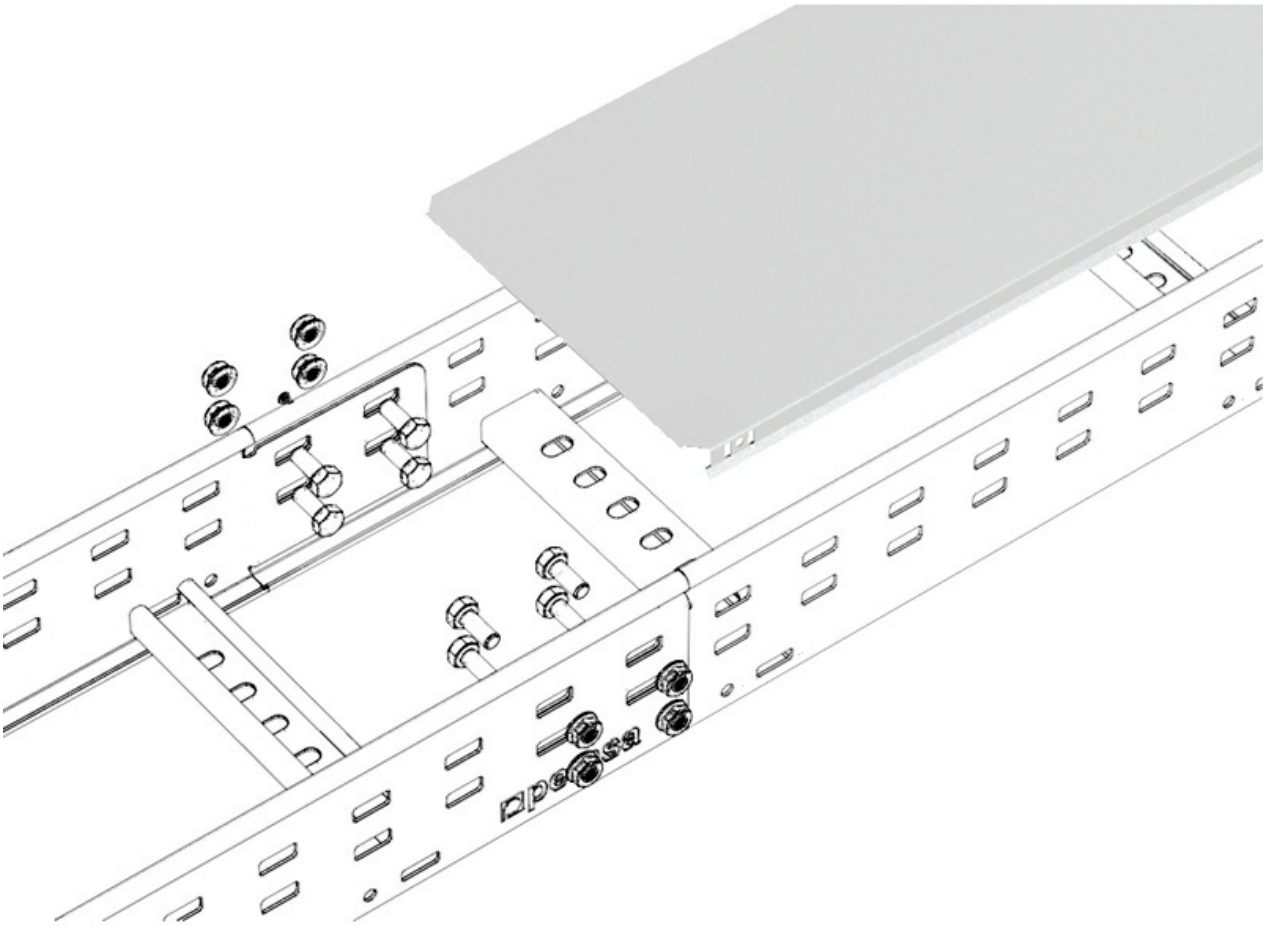

Any information included in this document is property of Pemsa®. It cannot be copied, total or partially, nor disclosed to third parties nor used without the explicit and written authorization by Pemsa®. These documents total or partially, can be subject to patent and/or be patent pending and therefore protected by intellectual and industrial property rights. Pemsa, Rejiband, Pemsaband, Inducanal, Rejitech, Megaband, Pemsaflex are registered trademarks property of "Pemsa Cable Management, S.A."

Cover (Ref: 73061200)

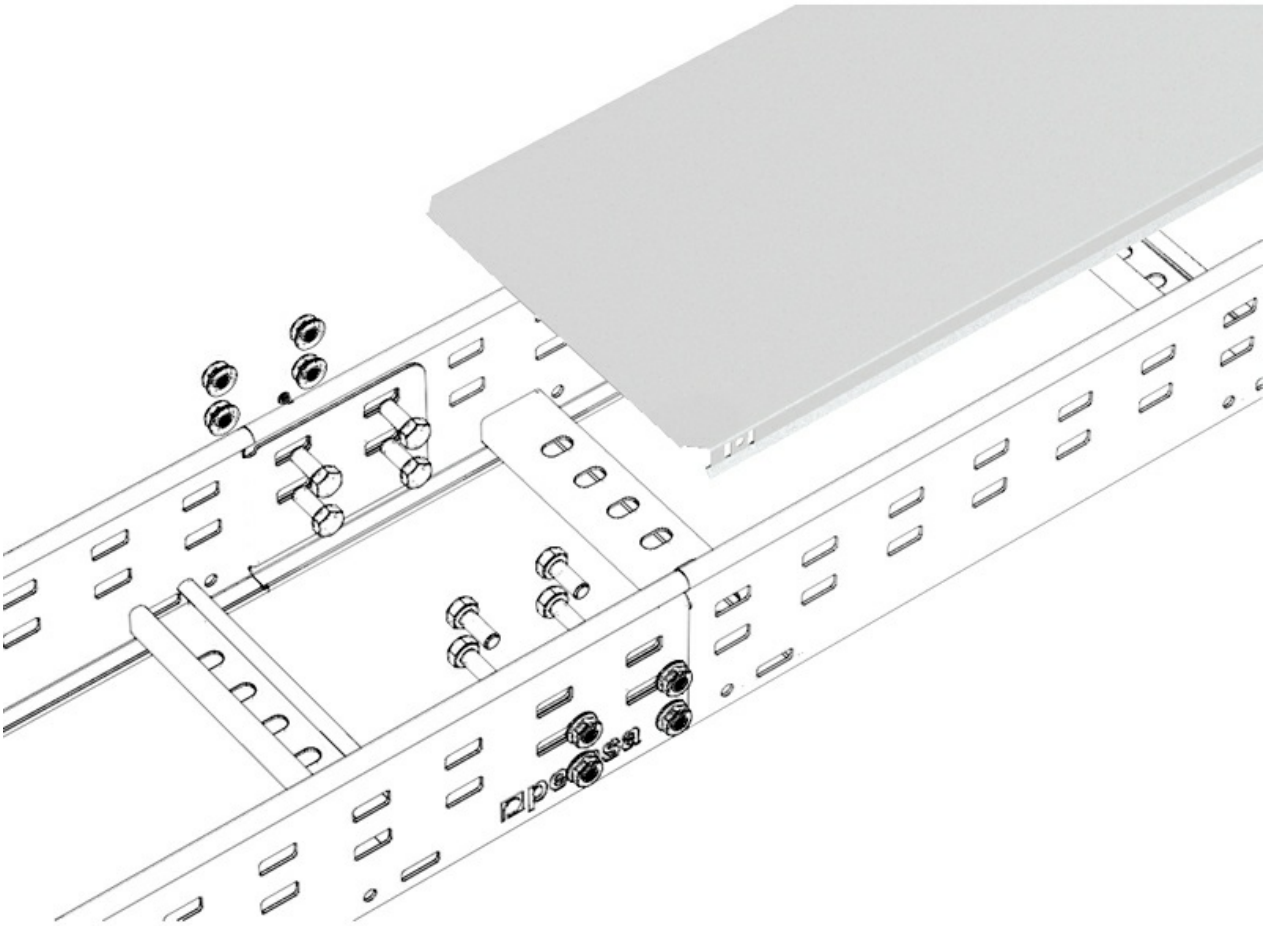

Any information included in this document is property of Pemsa®. It cannot be copied, total or partially, nor disclosed to third parties nor used without the explicit and written authorization by Pemsa®. These documents total or partially, can be subject to patent and/or be patent pending and therefore protected by intellectual and industrial property rights. Pemsa, Rejiband, Pemsaband, Inducanal, Rejitech, Megaband, Pemsaflex are registered trademarks property of "Pemsa Cable Management, S.A."