Cantilever Arm Pendand 41x82

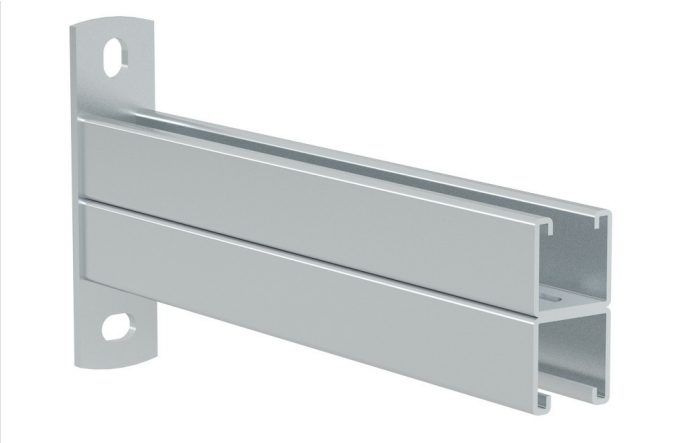

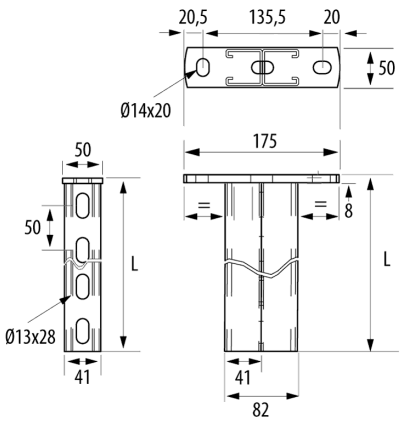

Description

41x82mm horizontal support for wall fixing of cable trays, electrical conduits and other heating pipe installations, A/C, fire protection systems, etc. It has a reinforced structure that makes it capable of supporting very high loads. Made of steel with GC protection system.

Advantages

Available in widths from 500 to 1000 mm depending on the protection system. It has wide fixing options.

The total length of the support is: (cable tray width + 55mm), that is, it has an additional measure of length to favor the separation of the installation from the facing or surface.

This range of Cantilever arms 41 has a quick installation solution when using the Strut clip, part number 67030049, making it a quick and safe installation option for Rejiband® wire mesh trays.

Valores de carga conforme a norma internacional IEC 61537.

Available in GC Protection System

CE conformity in accordance to the low voltage directive 2014 /35 /UE.

Applications

Aplicación como soporte horizontal a pared, para la soportación de bandejas portacables, (rejiband®, pemsaband®, megaband®, entre otras), sino que es muy útil para el soporte de tubos eléctricos y otras instalaciones de tuberías de calefacción, A/A, sistemas contra incendios, etc.

Solutions

Any information included in this document is property of Pemsa®. It cannot be copied, total or partially, nor disclosed to third parties nor used without the explicit and written authorization by Pemsa®. These documents total or partially, can be subject to patent and/or be patent pending and therefore protected by intellectual and industrial property rights. Pemsa, Rejiband, Pemsaband, Inducanal, Rejitech, Megaband, Pemsaflex are registered trademarks property of "Pemsa Cable Management, S.A."

Cantilever Arm Pendand 41x82

Main technical characteristics

500, 600, 800, 1000	1	Steel with surface coating	-25 / 105 °C	A1 No combustible	ETIM

Product data

Ⓢ	Class IEC 61537		REF	kg/u	CTA (kg)
GC	Class 6	500	82002622	3.370	376
GC	Class 6	600	82002623	3.890	318
GC	Class 6	800	82002624	4.930	247
GC	Class 6	1000	82002625	5.980	198
EZ	Class 3	500	82004243	3.310	
EZ	Class 3	600	82004244	3.830	
EZ	Class 3	800	82004245	4.850	
EZ	Class 3	1000	82004246	5.880	

Ⓢ Protection System

CU - Copper electroplated

PG - Pregalvanised

EZ - Electrogalvanised

BC - Electrogalvanised Bichromate

BK8 - High Resistance Coating

GC - Hot Dip Galvanising

INOX - Stainless Steel

PT - Polyester Paint

AL - Aluminum

LN - Brass or Nickel-plated brass

Ⓜ Insulating materials

PC+ABS - Halogen Free Polycarbonate + ABS

PVC - Polyvinyl Chloride

PP - Halogen Free Polypropylene

PA6 - Halogen Free Polyamide 6

PA12 - Halogen Free Polyamide 12

PU - Polyurethane

PE - Polyethylene

NBR - NBR rubber

PET - Thermoplastic Polyester

TPV - Thermoplastic

Any information included in this document is property of Pemsa®. It cannot be copied, total or partially, nor disclosed to third parties nor used without the explicit and written authorization by Pemsa®. These documents total or partially, can be subject to patent and/or be patent pending and therefore protected by intellectual and industrial property rights. Pemsa, Rejiband, Pemsaband, Inducanal, Rejitech, Megaband, Pemsaflex are registered trademarks property of "Pemsa Cable Management, S.A."

Cantilever Arm Pendand 41x82

Load diagrams

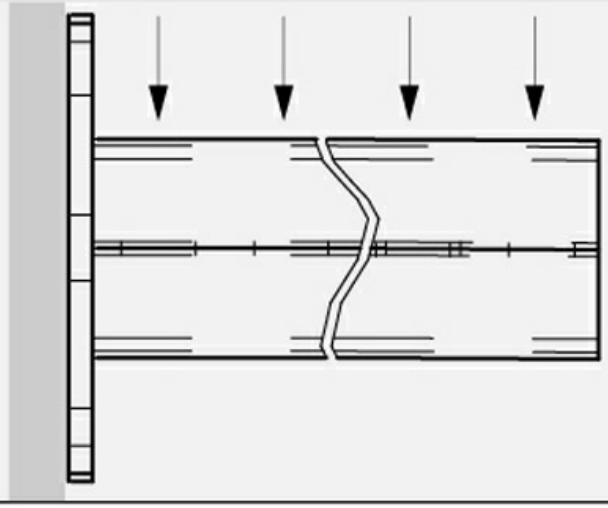

↓CTA↓ (kg)	kg
500	376
600	318
800	247
1000	198

Product applications

Any information included in this document is property of Pemsa®. It cannot be copied, total or partially, nor disclosed to third parties nor used without the explicit and written authorization by Pemsa®. These documents total or partially, can be subject to patent and/or be patent pending and therefore protected by intellectual and industrial property rights. Pemsa, Rejiband, Pemsaband, Inducanal, Rejitech, Megaband, Pemsaflex are registered trademarks property of "Pemsa Cable Management, S.A."

Cantilever Arm Pendand 41x82

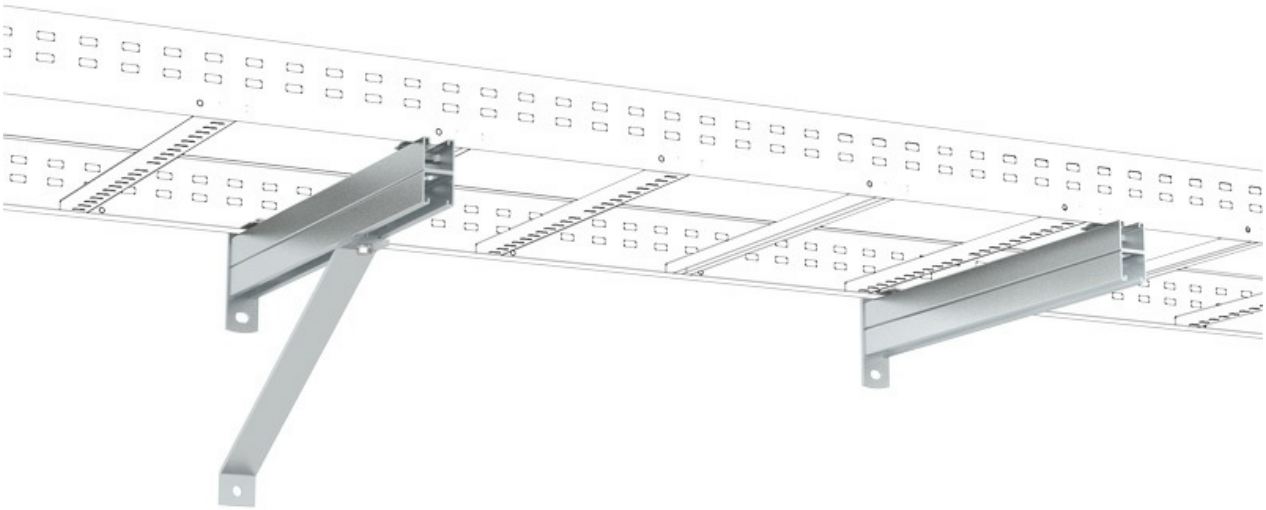

Any information included in this document is property of Pemsa®. It cannot be copied, total or partially, nor disclosed to third parties nor used without the explicit and written authorization by Pemsa®. These documents total or partially, can be subject to patent and/or be patent pending and therefore protected by intellectual and industrial property rights. Pemsa, Rejiband, Pemsaband, Inducanal, Rejitech, Megaband, Pemsaflex are registered trademarks property of "Pemsa Cable Management, S.A."

Cantilever Arm Pendand 41x82

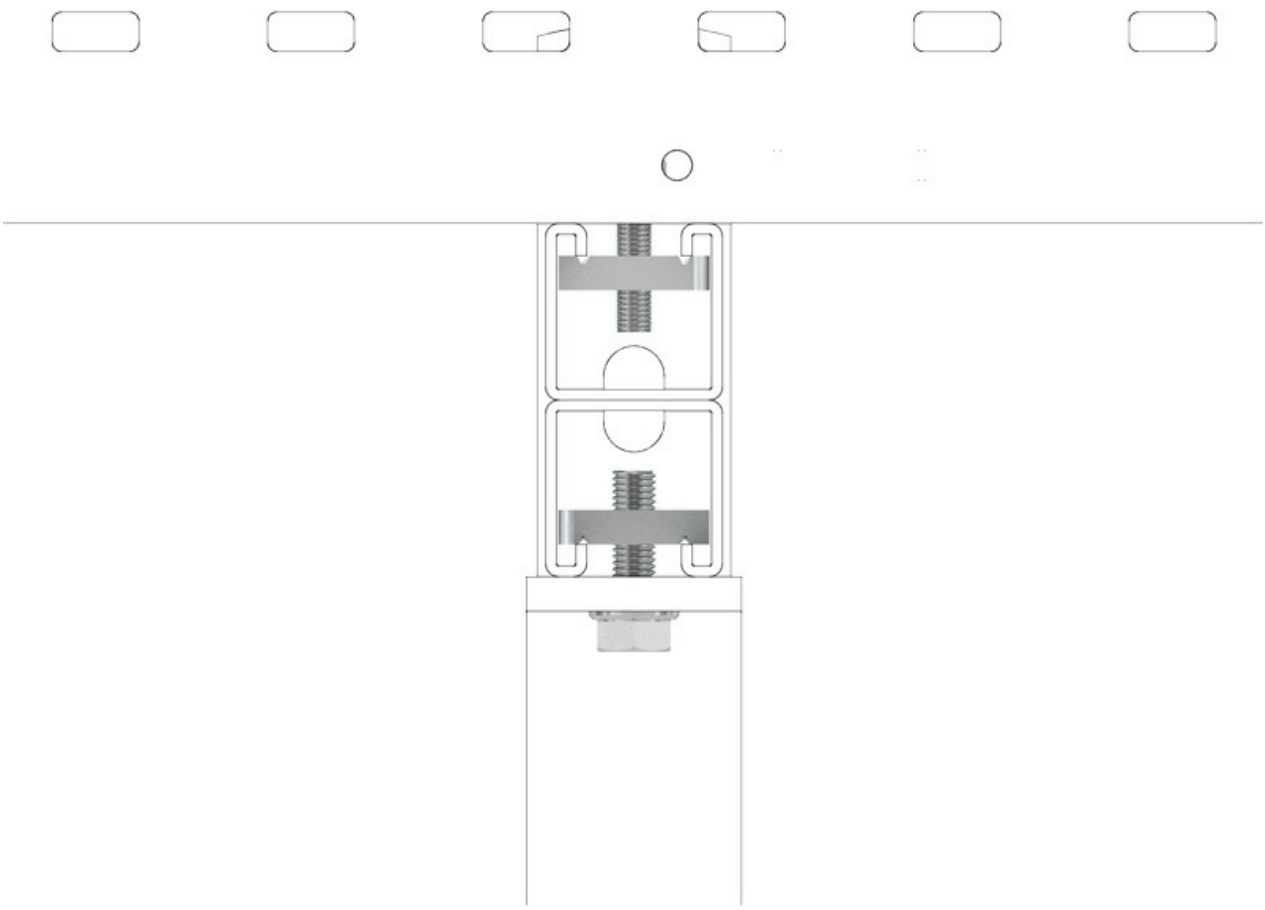

Any information included in this document is property of Pemsa®. It cannot be copied, total or partially, nor disclosed to third parties nor used without the explicit and written authorization by Pemsa®. These documents total or partially, can be subject to patent and/or be patent pending and therefore protected by intellectual and industrial property rights. Pemsa, Rejiband, Pemsaband, Inducanal, Rejitech, Megaband, Pemsaflex are registered trademarks property of "Pemsa Cable Management, S.A."

Cantilever Arm Pendand 41x82

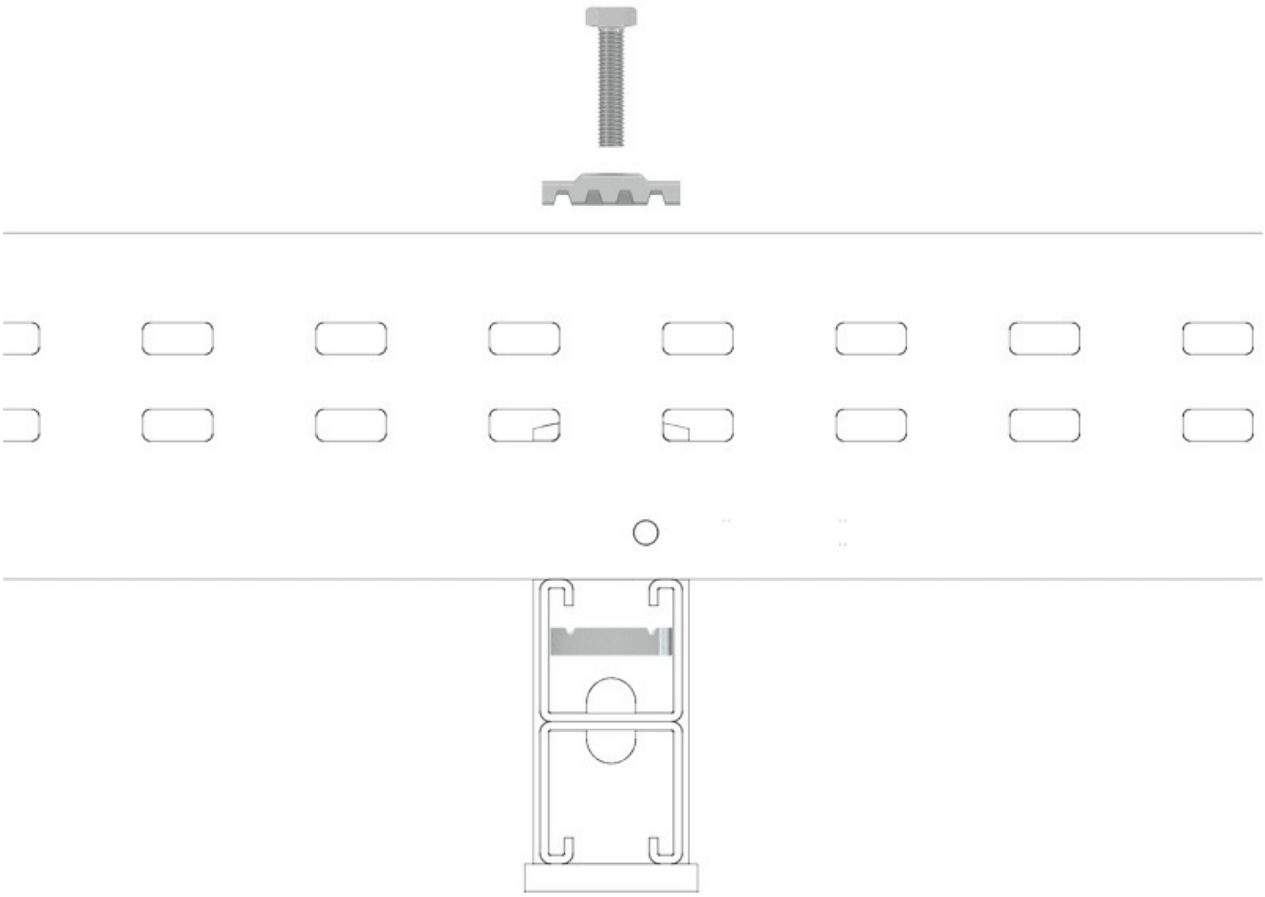

Any information included in this document is property of Pemsa®. It cannot be copied, total or partially, nor disclosed to third parties nor used without the explicit and written authorization by Pemsa®. These documents total or partially, can be subject to patent and/or be patent pending and therefore protected by intellectual and industrial property rights. Pemsa, Rejiband, Pemsaband, Inducanal, Rejitech, Megaband, Pemsaflex are registered trademarks property of "Pemsa Cable Management, S.A."

Cantilever Arm Pendand 41x82

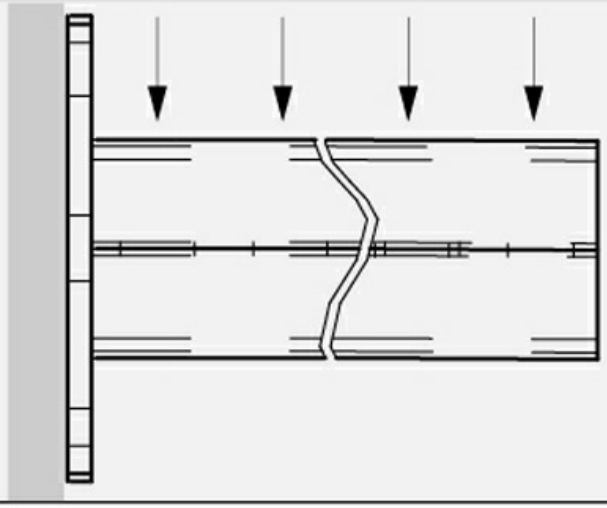

↓CTA↓ (kg)		kg
	500	376
	600	318
	800	247
	1000	198

Any information included in this document is property of Pemsa®. It cannot be copied, total or partially, nor disclosed to third parties nor used without the explicit and written authorization by Pemsa®. These documents total or partially, can be subject to patent and/or be patent pending and therefore protected by intellectual and industrial property rights. Pemsa, Rejiband, Pemsaband, Inducanal, Rejitech, Megaband, Pemsaflex are registered trademarks property of "Pemsa Cable Management, S.A."