Wall Brackets

23/11/2026

Medium Duty Cantilever RPLUS (Ref: 62035803)

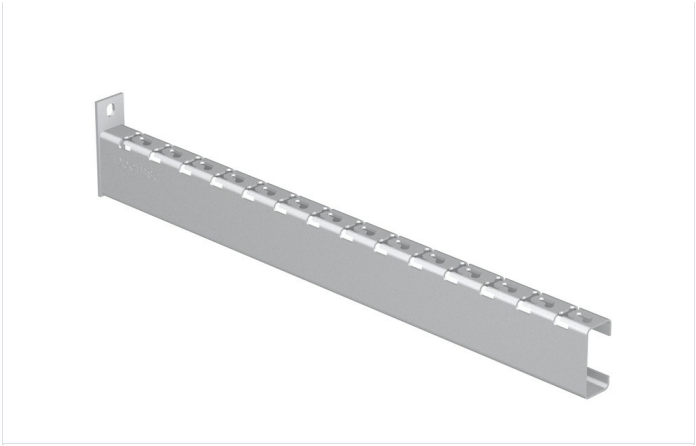

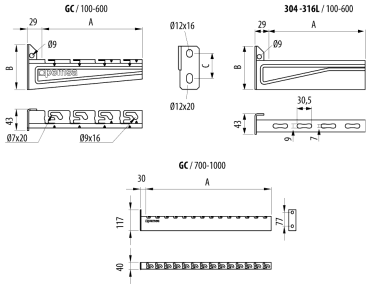

Description

Reinforced support with click system for the quick fixing of Rejiband® and Pemsaband® trays and Megaband® ladder for mounting on the wall, channel or ceiling mounted pendants. Width 800 mm, With GC protection system, HDG finish. Recommended for high loads. Manufactured in steel, with various Protection Systems and available for widths of 100, 150, 200, 300 and 400 mm.

Advantages

Available in several protection systems: GC, BK8 and stainless steel AISI 304 and AISI 316L.

N Mark of Aenor, in accordance with IEC 61537 and CE conformity to Directive 2014/35 / EU. Fire resistance E90 according to DIN 4102-12.

Structural reinforcement, which reduces the twisting and increases the load capacity.

Click system allows fast connection of the wire mesh tray without the need of fixings. Greater economy and quick assembly.

Universal mounting system compatible with Rejiband® wire mesh trays, Pemsaband® sheet trays and Megaband® ladder. A single support for all trays and ladder. Reduction in the number of references.

Applications

Suitable for supporting high loads of cable trays for electrical installations and / or of telecommunications in: Civil works, tunnels, car parks, public buildings, commercial centres, large infrastructures such as: Airports, underground, rail, tertiary sector, industrial naval, petrochemical, textile, chemical and food applications, according to the finish.

Solutions

ENERGY

Any information included in this document is property of Pemsa®. It cannot be copied, total or partially, nor disclosed to third parties nor used without the explicit and written authorization by Pemsa®. These documents total or partially, can be subject to patent and/or be patent pending and therefore protected by intellectual and industrial property rights. Pemsa, Rejiband, Pemsaband, Inducanal, Rejitech, Megaband, Pemsaflex are registered trademarks property of "Pemsa Cable Management, S.A."

Medium Duty Cantilever RPLUS (Ref: 62035803)

Product data

ETIM 10	EC000022	**u**	4
Huella de CO2. GWP A1-A3 (kg CO2 eq.)		**Material**	Steel with surface coating
Protection System	GC	**SWL (kg)**	220
Finish	HDG, Hot Dip Galvanised	**Working temperature range (°C)**	-50 / 150 °C
Resistance Class	Class 6	**Fire resistance**	A1 No combustible
Width (mm)	800		
kg/u	2,773		

Ⓢ Protection System

CU - Copper electroplated

PG - Pregalvanised

EZ - Electrogalvanised

BC - Electrogalvanised Bichromate

BK8 - High Resistance Coating

GC - Hot Dip Galvanising

INOX - Stainless Steel

PT - Polyester Paint

AL - Aluminum

LN - Brass or Nickel-plated brass

Ⓜ Insulating materials

PC+ABS - Halogen Free Polycarbonate + ABS

PVC - Polyvinyl Chloride

PP - Halogen Free Polypropylene

PA6 - Halogen Free Polyamide 6

PA12 - Halogen Free Polyamide 12

PU - Polyurethane

PE - Polyethylene

NBR - NBR rubber

PET - Thermoplastic Polyester

TPV - Thermoplastic

Any information included in this document is property of Pemsa®. It cannot be copied, total or partially, nor disclosed to third parties nor used without the explicit and written authorization by Pemsa®. These documents total or partially, can be subject to patent and/or be patent pending and therefore protected by intellectual and industrial property rights. Pemsa, Rejiband, Pemsaband, Inducanal, Rejitech, Megaband, Pemsaflex are registered trademarks property of "Pemsa Cable Management, S.A."

Medium Duty Cantilever RPLUS (Ref: 62035803)

Load diagrams

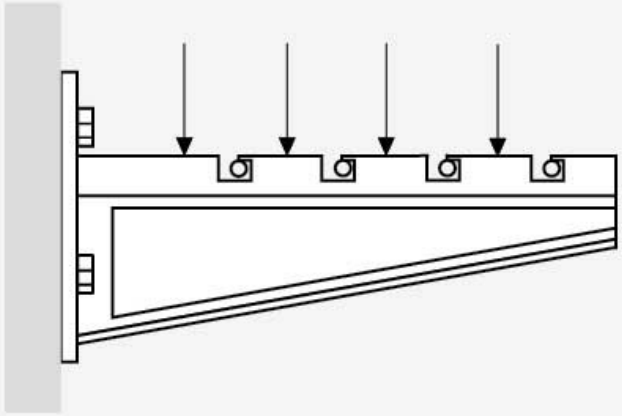

↓CTA↓ (kg)	A	kg
GC / C8	100	225
	150	245
	200	190
	300	110
	400	245
	500	135
	600	110
	700	220
	750	220
	800	220
	900	220
	1000	220
304 / 316 L	100	160
	150	190
	200	190
	300	130
	400	150
	500	110
	600	95

Any information included in this document is property of Pemsa®. It cannot be copied, total or partially, nor disclosed to third parties nor used without the explicit and written authorization by Pemsa®. These documents total or partially, can be subject to patent and/or be patent pending and therefore protected by intellectual and industrial property rights. Pemsa, Rejiband, Pemsaband, Inducanal, Rejitech, Megaband, Pemsaflex are registered trademarks property of "Pemsa Cable Management, S.A."

Medium Duty Cantilever RPLUS (Ref: 62035803)

Product applications

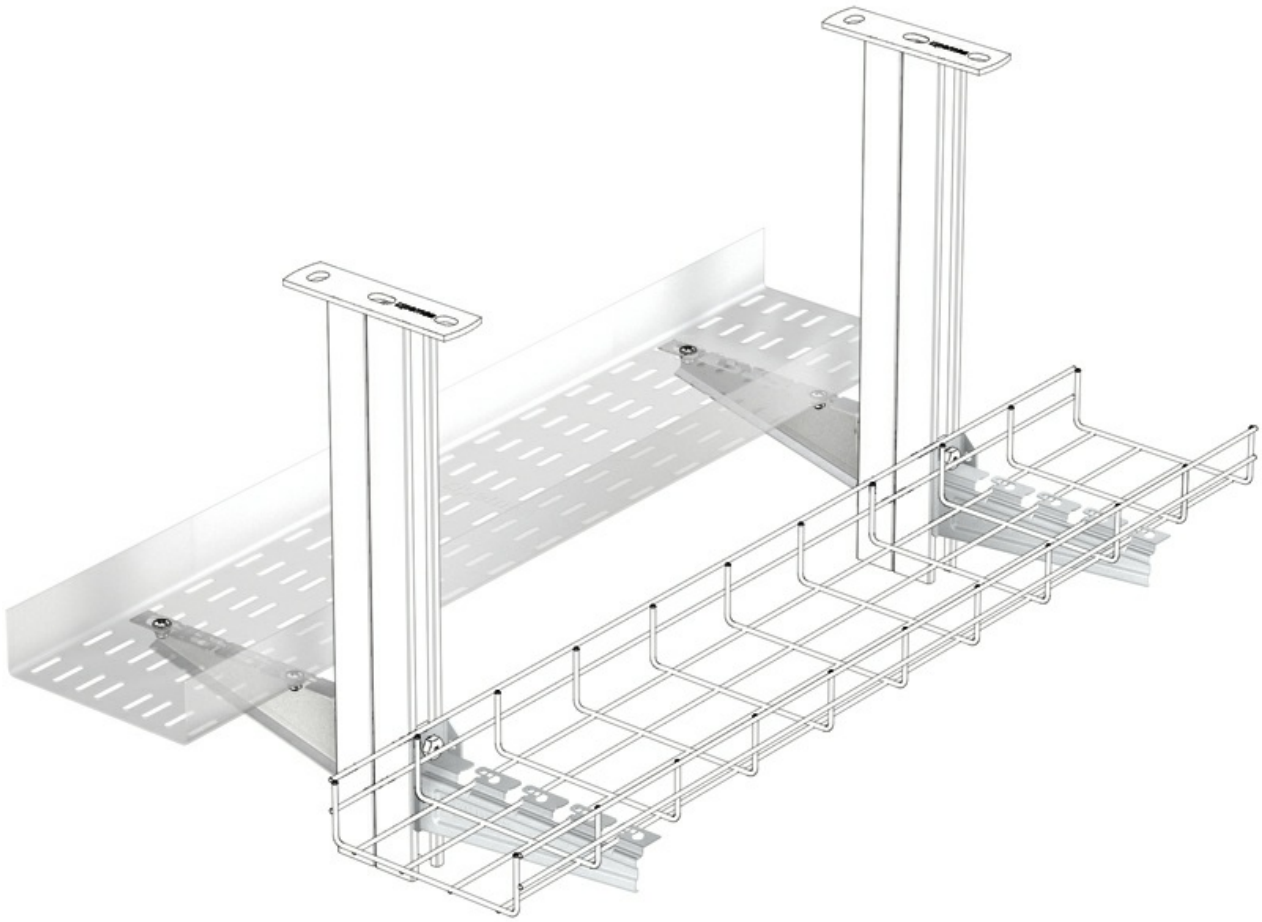

Any information included in this document is property of Pemsa®. It cannot be copied, total or partially, nor disclosed to third parties nor used without the explicit and written authorization by Pemsa®. These documents total or partially, can be subject to patent and/or be patent pending and therefore protected by intellectual and industrial property rights. Pemsa, Rejiband, Pemsaband, Inducanal, Rejitech, Megaband, Pemsaflex are registered trademarks property of "Pemsa Cable Management, S.A."

Wall Brackets

Medium Duty Cantilever RPLUS (Ref: 62035803)

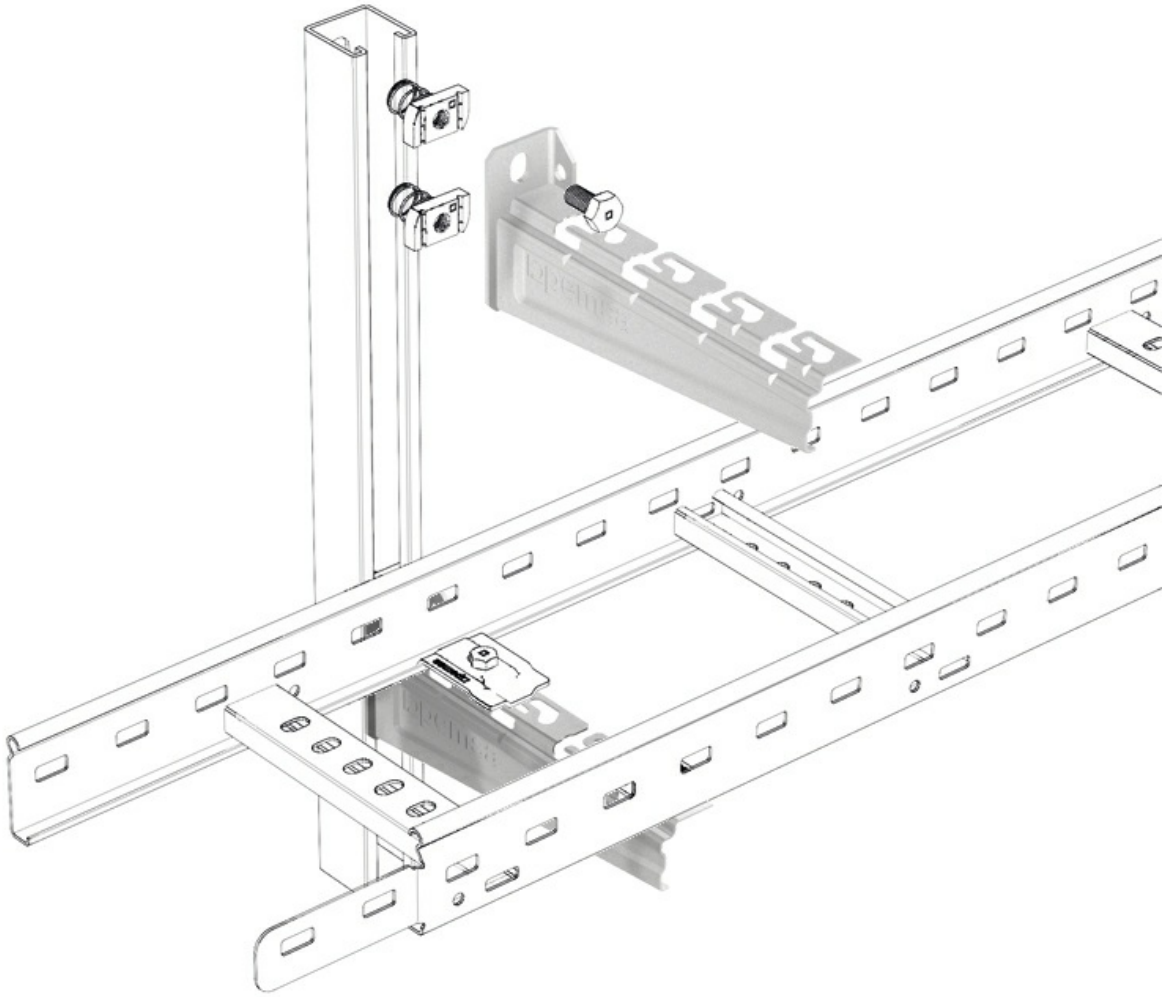

Any information included in this document is property of Pemsa®. It cannot be copied, total or partially, nor disclosed to third parties nor used without the explicit and written authorization by Pemsa®. These documents total or partially, can be subject to patent and/or be patent pending and therefore protected by intellectual and industrial property rights. Pemsa, Rejiband, Pemsaband, Inducanal, Rejitech, Megaband, Pemsaflex are registered trademarks property of "Pemsa Cable Management, S.A."