Cable Tray Accessories

Side Entry Cover Click

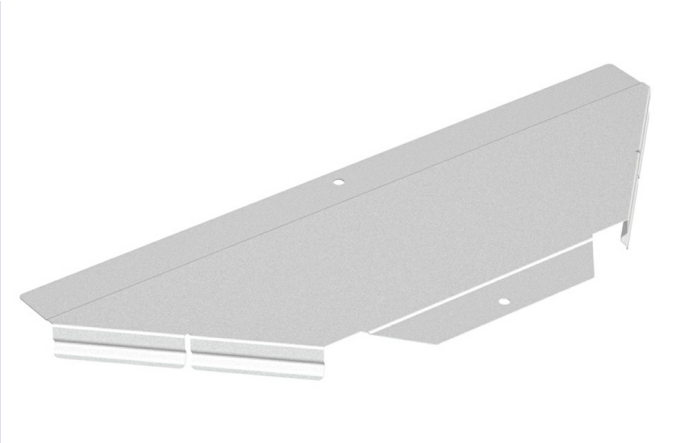

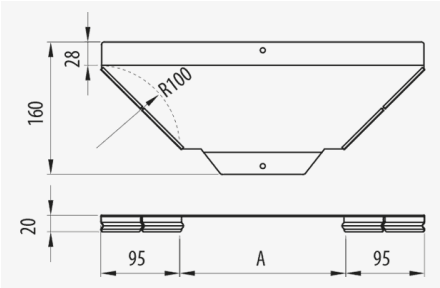

Description

Metal cover for the protection of cables in the Click Side Entry. It has a press-fit assembly system. Made of steel and available in various sizes and Protection Systems.

Advantages

Press-fit click system requiring no additional parts.

The ends have an overlap to improve the fit with straight lids.

Available in all sizes and protection systems: PG, GC and stainless steel AISI304 and AISI316.

Applications

It is used for the protection of wiring in the installation of Pemsaband® One perforated and solid tray installations where the Click Side Entry is used for installations in public buildings, infrastructures and civil works, tertiary sector and industrial applications.

Solutions

Any information included in this document is property of Pemsa®. It cannot be copied, total or partially, nor disclosed to third parties nor used without the explicit and written authorization by Pemsa®. These documents total or partially, can be subject to patent and/or be patent pending and therefore protected by intellectual and industrial property rights. Pemsa, Rejiband, Pemsaband, Inducanal, Rejitech, Megaband, Pemsaflex are registered trademarks property of "Pemsa Cable Management, S.A."

Side Entry Cover Click

Main technical characteristics

60, 100, 150, 200, 300, 400, 500, 600	100	1	-50 / 150 °C	A1 No combustible	ETIM EC002406

Product data

Ⓢ	Class IEC 61537		REF	kg/u	Ⓜ
PG	Class 3	60	73023060	0.123	Steel with surface coating
PG	Class 3	100	73023100	0.166	Steel with surface coating
PG	Class 3	150	73023150	0.204	Steel with surface coating
PG	Class 3	200	73023200	0.243	Steel with surface coating
PG	Class 3	300	73023300	0.372	Steel with surface coating
PG	Class 3	400	73023400	0.462	Steel with surface coating
PG	Class 3	500	73023500	0.630	Steel with surface coating
PG	Class 3	600	73023600	0.732	Steel with surface coating
GC	Class 5	100	73033100	0.238	Steel with surface coating
GC	Class 5	150	73033150	0.292	Steel with surface coating
GC	Class 5	200	73033200	0.426	Steel with surface coating
GC	Class 5	300	73033300	0.562	Steel with surface coating
GC	Class 5	400	73033400	0.698	Steel with surface coating
GC	Class 5	500	73033500	0.834	Steel with surface coating
GC	Class 5	600	73033600	0.970	Steel with surface coating
INOX	Class 9C	100	73053100	0.134	Stainless steel AISI 304
INOX	Class 9C	150	73053150	0.165	Stainless steel AISI 304
INOX	Class 9C	200	73053200	0.197	Stainless steel AISI 304
INOX	Class 9C	300	73053300	0.259	Stainless steel AISI 304
INOX	Class 9C	400	73053400	0.322	Stainless steel AISI 304
INOX	Class 9C	500	73053500	0.385	Stainless steel AISI 304
INOX	Class 9C	600	73053600	0.448	Stainless steel AISI 304
INOX	Class 9D	100	73063100	0.134	Acero inoxidable AISI 316L
INOX	Class 9D	150	73063150	0.165	Acero inoxidable AISI 316L
INOX	Class 9D	200	73063200	0.197	Acero inoxidable AISI 316L
INOX	Class 9D	300	73063300	0.259	Acero inoxidable AISI 316L
INOX	Class 9D	400	73063400	0.322	Acero inoxidable AISI 316L
INOX	Class 9D	500	73063500	0.385	Acero inoxidable AISI 316L
INOX	Class 9D	600	73063600	0.448	Acero inoxidable AISI 316L
AZ+	Class 8	60	82003837	0.159	Steel with surface coating
AZ+	Class 8	100	82003838	0.171	Steel with surface coating
AZ+	Class 8	150	82003839	0.211	Steel with surface coating
AZ+	Class 8	200	82003840	0.251	Steel with surface coating
AZ+	Class 8	300	82003841	0.435	Steel with surface coating
AZ+	Class 8	400	82003842	0.540	Steel with surface coating
AZ+	Class 8	500	82003843	0.645	Steel with surface coating

Any information included in this document is property of Pemsa®. It cannot be copied, total or partially, nor disclosed to third parties nor used without the explicit and written authorization by Pemsa®. These documents total or partially, can be subject to patent and/or be patent pending and therefore protected by intellectual and industrial property rights. Pemsa, Rejiband, Pemsaband, Inducanal, Rejitech, Megaband, Pemsaflex are registered trademarks property of "Pemsa Cable Management, S.A."

Side Entry Cover Click

Ⓢ	Class IEC 61537		REF	kg/u	Ⓜ
AZ+	Class 8	600	82003844	0.750	Steel with surface coating

Ⓢ Protection System

CU - Copper electroplated

PG - Pregalvanised

EZ - Electrogalvanised

BC - Electrogalvanised Bichromate

BK8 - High Resistance Coating

GC - Hot Dip Galvanising

INOX - Stainless Steel

PT - Polyester Paint

AL - Aluminum

LN - Brass or Nickel-plated brass

Ⓜ Insulating materials

PC+ABS - Halogen Free Polycarbonate + ABS

PVC - Polyvinyl Chloride

PP - Halogen Free Polypropylene

PA6 - Halogen Free Polyamide 6

PA12 - Halogen Free Polyamide 12

PU - Polyurethane

PE - Polyethylene

NBR - NBR rubber

PET - Thermoplastic Polyester

TPV - Thermoplastic

Any information included in this document is property of Pemsa®. It cannot be copied, total or partially, nor disclosed to third parties nor used without the explicit and written authorization by Pemsa®. These documents total or partially, can be subject to patent and/or be patent pending and therefore protected by intellectual and industrial property rights. Pemsa, Rejiband, Pemsaband, Inducanal, Rejitech, Megaband, Pemsaflex are registered trademarks property of "Pemsa Cable Management, S.A."

Side Entry Cover Click

Product applications

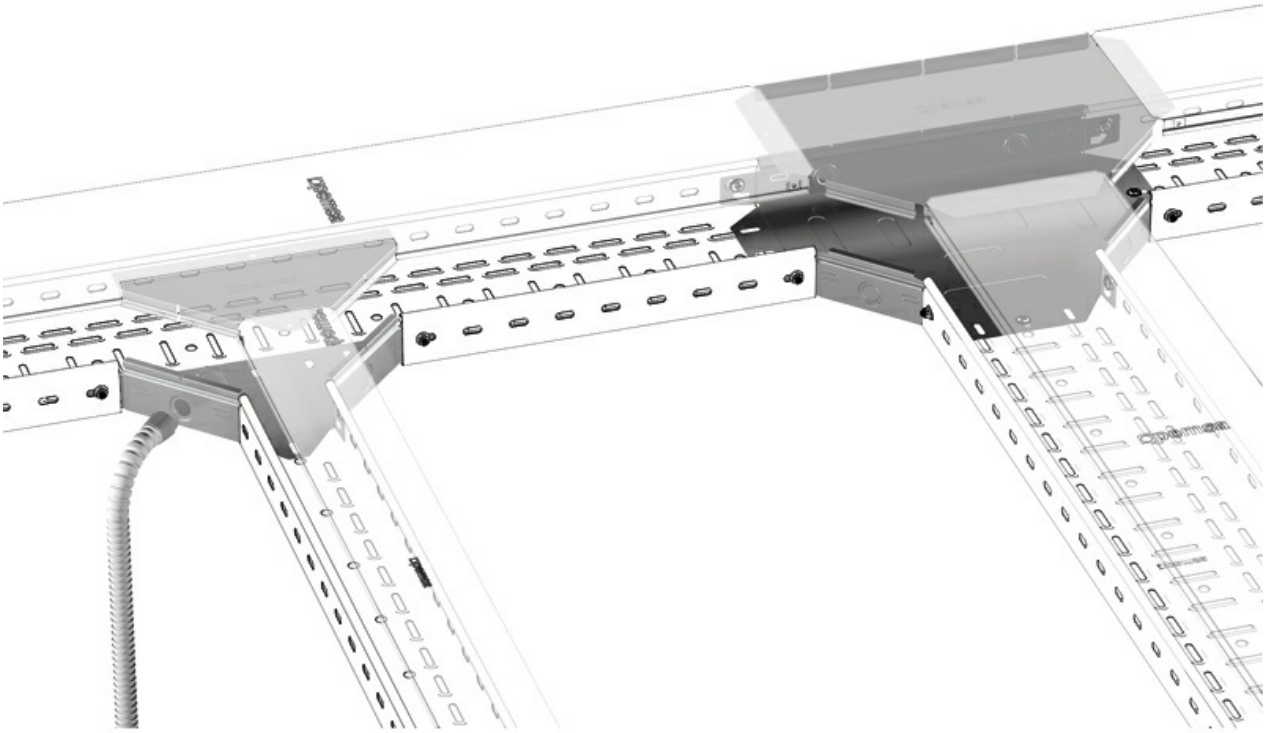

Any information included in this document is property of Pemsa®. It cannot be copied, total or partially, nor disclosed to third parties nor used without the explicit and written authorization by Pemsa®. These documents total or partially, can be subject to patent and/or be patent pending and therefore protected by intellectual and industrial property rights. Pemsa, Rejiband, Pemsaband, Inducanal, Rejitech, Megaband, Pemsaflex are registered trademarks property of "Pemsa Cable Management, S.A."

Side Entry Cover Click

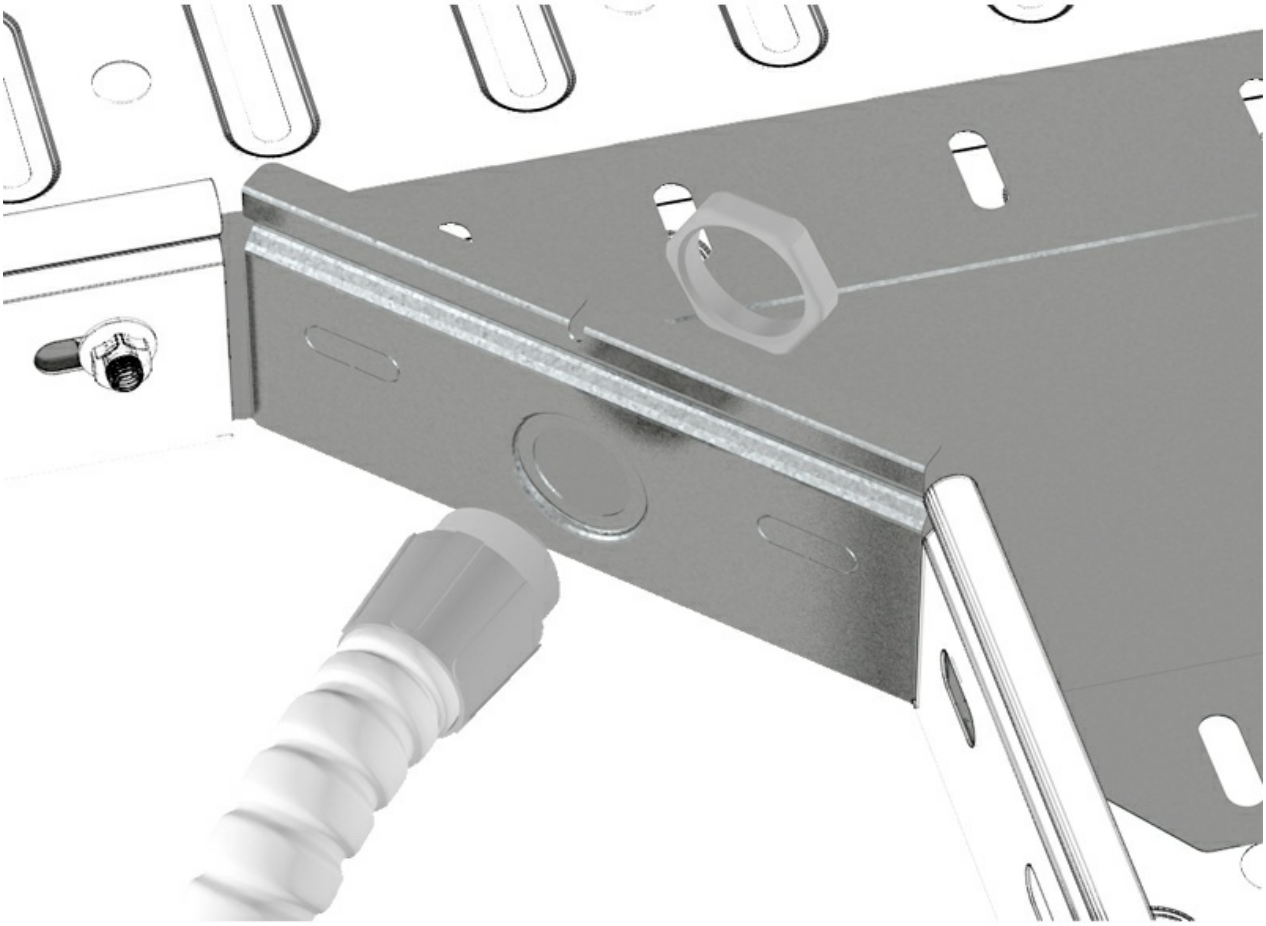

Any information included in this document is property of Pemsa®. It cannot be copied, total or partially, nor disclosed to third parties nor used without the explicit and written authorization by Pemsa®. These documents total or partially, can be subject to patent and/or be patent pending and therefore protected by intellectual and industrial property rights. Pemsa, Rejiband, Pemsaband, Inducanal, Rejitech, Megaband, Pemsaflex are registered trademarks property of "Pemsa Cable Management, S.A."