Tee Cover Click



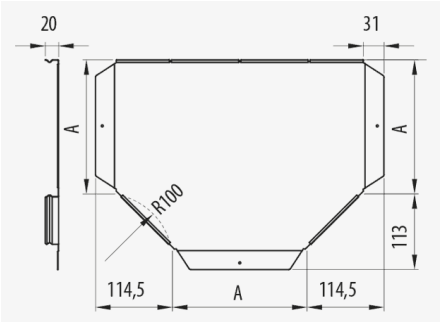

Description

Metal cover for the protection of cables in the Click Tee. It has a press-fit assembly system. Made of steel and available in various sizes and Protection Systems.

Advantages

Press-fit click system requiring no additional parts.

The ends have an overlap to improve the fit with straight lids.

Available in all sizes and protection systems: PG, GC and stainless steel AISI304 and AISI316.

Applications

It is used for the protection of wiring in the installation of Pemsaband® One perforated and solid tray installations where the Click Tee is used for installations in public buildings, infrastructures and civil works, tertiary sector and industrial applications.

Solutions

Any information included in this document is property of Pemsa®. It cannot be copied, total or partially, nor disclosed to third parties nor used without the explicit and written authorization by Pemsa®. These documents total or partially, can be subject to patent and/or be patent pending and therefore protected by intellectual and industrial property rights. Pemsa, Rejiband, Pemsaband, Inducanal, Rejitech, Megaband, Pemsaflex are registered trademarks property of "Pemsa Cable Management, S.A."

Tee Cover Click

Main technical characteristics

100, 150, 200, 300, 400, 500, 600	100	1	-50 / 150 °C	A1 No combustible	ETIM 10 EC002406

Product data

Ⓢ	Class IEC 61537	⟺	REF	kg/u	Ⓜ
PG	Class 3	100	73022100	0,354	Steel with surface coating
PG	Class 3	150	73022150	0,546	Steel with surface coating
PG	Class 3	200	73022200	0,769	Steel with surface coating
PG	Class 3	300	73022300	1,310	Steel with surface coating
PG	Class 3	400	73022400	1,980	Steel with surface coating
PG	Class 3	500	73022500	2,770	Steel with surface coating
PG	Class 3	600	73022600	3,690	Steel with surface coating
GC	Class 5	100	73032100	0,381	Steel with surface coating
GC	Class 5	150	73032150	0,587	Steel with surface coating
GC	Class 5	200	73032200	0,826	Steel with surface coating
GC	Class 5	300	73032300	1,410	Steel with surface coating
GC	Class 5	400	73032400	2,130	Steel with surface coating
GC	Class 5	500	73032500	2,980	Steel with surface coating
GC	Class 5	600	73032600	3,960	Steel with surface coating
INOX	Class 9C	100	73052100	0,310	Stainless steel AISI 304
INOX	Class 9C	150	73052150	0,478	Stainless steel AISI 304
INOX	Class 9C	200	73052200	0,673	Stainless steel AISI 304
INOX	Class 9C	300	73052300	1,150	Stainless steel AISI 304
INOX	Class 9C	400	73052400	1,730	Stainless steel AISI 304
INOX	Class 9C	500	73052500	2,420	Stainless steel AISI 304
INOX	Class 9C	600	73052600	3,230	Stainless steel AISI 304
INOX	Class 9D	100	73062100	0,310	Acero inoxidable AISI 316L
INOX	Class 9D	150	73062150	0,478	Acero inoxidable AISI 316L
INOX	Class 9D	200	73062200	0,673	Acero inoxidable AISI 316L
INOX	Class 9D	300	73062300	1,150	Acero inoxidable AISI 316L
INOX	Class 9D	400	73062400	1,730	Acero inoxidable AISI 316L
INOX	Class 9D	500	73062500	2,420	Acero inoxidable AISI 316L
INOX	Class 9D	600	73062600	3,230	Acero inoxidable AISI 316L
AZ+	Class 8	100	82003865	0,354	Steel with surface coating
AZ+	Class 8	150	82003866	0,546	Steel with surface coating
AZ+	Class 8	200	82003867	0,769	Steel with surface coating
AZ+	Class 8	300	82003868	1,310	Steel with surface coating
AZ+	Class 8	400	82003869	1,980	Steel with surface coating
AZ+	Class 8	500	82003870	2,770	Steel with surface coating
AZ+	Class 8	600	82003871	3,690	Steel with surface coating

Ⓢ Protection System

Any information included in this document is property of Pemsa®. It cannot be copied, total or partially, nor disclosed to third parties nor used without the explicit and written authorization by Pemsa®. These documents total or partially, can be subject to patent and/or be patent pending and therefore protected by intellectual and industrial property rights. Pemsa, Rejiband, Pemsaband, Inducanal, Rejitech, Megaband, Pemsaflex are registered trademarks property of "Pemsa Cable Management, S.A."

CU - Copper electroplated

PG - Pregalvanised

EZ - Electrogalvanised

BC - Electrogalvanised Bichromate

BK8 - High Resistance Coating

GC - Hot Dip Galvanising

INOX - Stainless Steel

PT - Polyester Paint

AL - Aluminum

LN - Brass or Nickel-plated brass

Insulating materials

PC+ABS - Halogen Free Polycarbonate + ABS

PVC - Polyvinyl Chloride

PP - Halogen Free Polypropylene

PA6 - Halogen Free Polyamide 6

PA12 - Halogen Free Polyamide 12

PU - Polyurethane

PE - Polyethylene

NBR - NBR rubber

PET - Thermoplastic Polyester

TPV - Thermoplastic

Any information included in this document is property of Pemsa®. It cannot be copied, total or partially, nor disclosed to third parties nor used without the explicit and written authorization by Pemsa®. These documents total or partially, can be subject to patent and/or be patent pending and therefore protected by intellectual and industrial property rights. Pemsa, Rejiband, Pemsaband, Inducanal, Rejitech, Megaband, Pemsaflex are registered trademarks property of "Pemsa Cable Management, S.A."