Clamp I



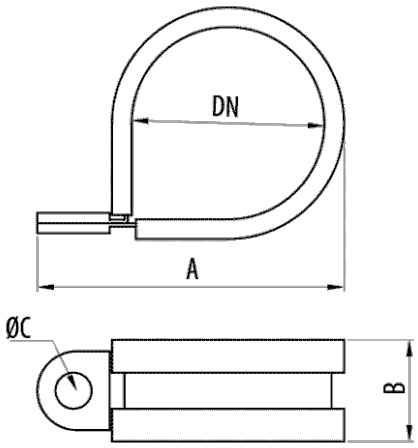

Description

Zinc plated steel clamp with elastomer profile for fixing conduits in cable management installations and for protection against vibrations. Available in different diameters.

Advantages

The NBR elastomer profile dampens vibrations.

Available in various sizes: NW7, NW9, NW11, NW13, NW16, NW21, NW29, NW36 and NW48.

Working temperature: -25°C to + 100°C.

CE conformity to the 2014/35 directive and the EN IEC 61386 standard.

Manufactured in PG protection system steel with a NBR elastomer profile.

Applications

Suitable for the surface fixing of TFA, TM, TM-PVC, Ecoflex® flexible conduits and Pemsaflex® in the management of electrical cables for general applications, building, tertiary and industrial sectors.

Solutions

Any information included in this document is property of Pemsa®. It cannot be copied, total or partially, nor disclosed to third parties nor used without the explicit and written authorization by Pemsa®. These documents total or partially, can be subject to patent and/or be patent pending and therefore protected by intellectual and industrial property rights. Pemsa, Rejiband, Pemsaband, Inducanal, Rejitech, Megaband, Pemsaflex are registered trademarks property of "Pemsa Cable Management, S.A."

Clamp I

Main technical characteristics

Ⓢ EZ | Ⓕ EZ2, Electrogalvanised | DN NW 7, NW10, NW12, NW17, NW23, NW29, NW36, NW48 | Ⓜ ACERO CON PROT. SUPERFICIAL,NBR

-25 / 120 °C | LIBRE DE HALÓGENOS,NO PROPAGADOR DE LA LLAMA | ETIM 10 EC011409

Product data

DN	A (mm)	B (mm)	C (mm)	REF	kg/u	u
NW 7	25	12.5	4.2	39095000	0,035	100
NW10	27	12.5	4.2	39095100	0,040	100
NW12	30	12.5	4.2	39095200	0,042	100
NW17	40	15.5	5.5	39095400	0,093	100
NW23	48	15.5	5.5	39095500	0,114	50
NW29	60	18	6.2	39095600	0,233	30
NW36	74	18	6.3	39095700	0,283	20
NW48	86	18.5	6.2	39095800	0,342	20

Ⓢ Protection System

CU - Copper electroplated

PG - Pregalvanised

EZ - Electrogalvanised

BC - Electrogalvanised Bichromate

BK8 - High Resistance Coating

GC - Hot Dip Galvanising

INOX - Stainless Steel

PT - Polyester Paint

AL - Aluminum

LN - Brass or Nickel-plated brass

Ⓜ Insulating materials

PC+ABS - Halogen Free Polycarbonate + ABS

PVC - Polyvinyl Chloride

PP - Halogen Free Polypropylene

PA6 - Halogen Free Polyamide 6

PA12 - Halogen Free Polyamide 12

PU - Polyurethane

PE - Polyethylene

NBR - NBR rubber

PET - Thermoplastic Polyester

TPV - Thermoplastic

Any information included in this document is property of Pemsa®. It cannot be copied, total or partially, nor disclosed to third parties nor used without the explicit and written authorization by Pemsa®. These documents total or partially, can be subject to patent and/or be patent pending and therefore protected by intellectual and industrial property rights. Pemsa, Rejiband, Pemsaband, Inducanal, Rejitech, Megaband, Pemsaflex are registered trademarks property of "Pemsa Cable Management, S.A."