Conduit Protector

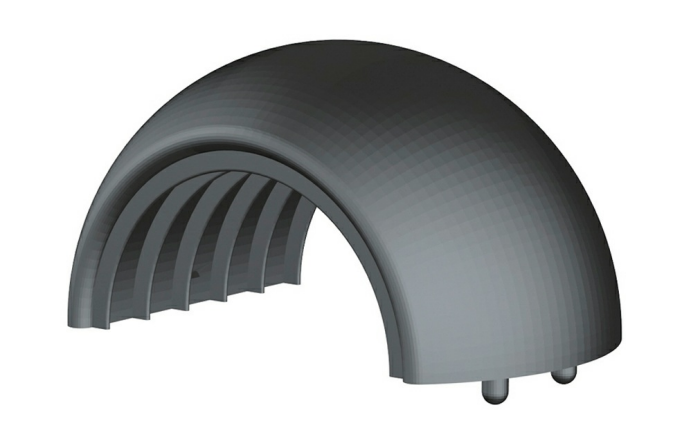

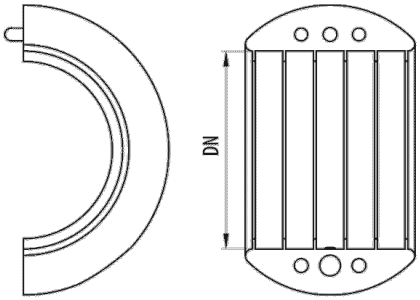

Description

Item for the protection against shocks and abrasion of polyamide 12 self-extinguishing conduits in black RAL 9005 colour, free of halogens and available in several sizes. Suitable for RB-PA and RB-PU flexible conduits for robotics applications.

Advantages

Manufactured in polyamide 12. Self-extinguishing, halogen-free and flame-retardant.

Protection of the tube in the areas of shock, impact, abrasion or wear.

Working temperature: -25°C to + 90°C.

Application as a ball joint joint with the clamp to favour the rotation of the flexible conduit for robot wiring.

CE conformity to the 2014/35 directive and the IEC 61386 standard.

Applications

Suitable for Robotics and wiring installations for robot arms in assembly lines, industrial applications, etc.

Solutions

Any information included in this document is property of Pemsa®. It cannot be copied, total or partially, nor disclosed to third parties nor used without the explicit and written authorization by Pemsa®. These documents total or partially, can be subject to patent and/or be patent pending and therefore protected by intellectual and industrial property rights. Pemsa, Rejiband, Pemsaband, Inducanal, Rejitech, Megaband, Pemsaflex are registered trademarks property of "Pemsa Cable Management, S.A."

Conduit Protector

Main technical characteristics

Colour Black RAL 9005

DN NW36, NW48, NW52, NW70

10

Poyamide 12

-25 / 90 °C

ETIM 10

LIBRE DE HALÓGENOS,NO PROPAGADOR DE LA LLAMA

Product data

DN	Ref	kg/u
NW36	33100036	0,050
NW48	33100048	0,066
NW52	33100052	0,074
NW70	33100070	0,133

Protection System

CU - Copper electroplated

PG - Pregalvanised

EZ - Electrogalvanised

BC - Electrogalvanised Bichromate

BK8 - High Resistance Coating

GC - Hot Dip Galvanising

INOX - Stainless Steel

PT - Polyester Paint

AL - Aluminum

LN - Brass or Nickel-plated brass

Insulating materials

PC+ABS - Halogen Free Polycarbonate + ABS

PVC - Polyvinyl Chloride

PP - Halogen Free Polypropylene

PA6 - Halogen Free Polyamide 6

PA12 - Halogen Free Polyamide 12

PU - Polyurethane

PE - Polyethylene

NBR - NBR rubber

PET - Thermoplastic Polyester

TPV - Thermoplastic

Any information included in this document is property of Pemsa®. It cannot be copied, total or partially, nor disclosed to third parties nor used without the explicit and written authorization by Pemsa®. These documents total or partially, can be subject to patent and/or be patent pending and therefore protected by intellectual and industrial property rights. Pemsa, Rejiband, Pemsaband, Inducanal, Rejitech, Megaband, Pemsaflex are registered trademarks property of "Pemsa Cable Management, S.A."