Conduit Protector (Ref: 33100036)

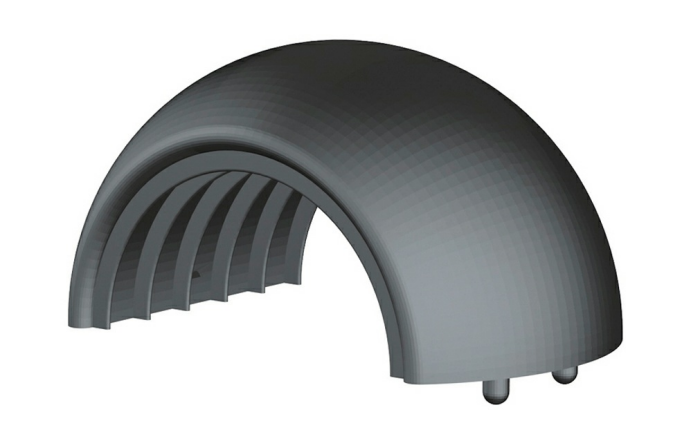

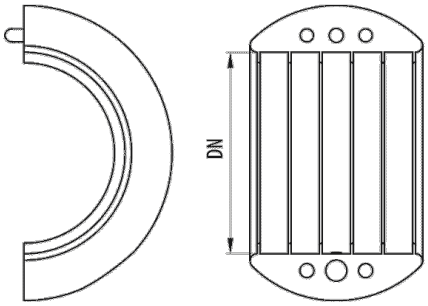

Description

Item for the protection against shocks and abrasion of polyamide 12 self-extinguishing conduits in black RAL 9005 colour, free of halogens and available in several sizes. Suitable for RB-PA and RB-PU flexible conduits for robotics applications.

Advantages

Application as a ball joint joint with the clamp to favour the rotation of the flexible conduit for robot wiring.

CE conformity to the 2014/35 directive and the IEC 61386 standard.

Manufactured in polyamide 12. Self-extinguishing, halogen-free and flame-retardant.

Protection of the tube in the areas of shock, impact, abrasion or wear.

Working temperature: -25°C to + 90°C.

Applications

Suitable for Robotics and wiring installations for robot arms in assembly lines, industrial applications, etc.

Solutions

Any information included in this document is property of Pemsa®. It cannot be copied, total or partially, nor disclosed to third parties nor used without the explicit and written authorization by Pemsa®. These documents total or partially, can be subject to patent and/or be patent pending and therefore protected by intellectual and industrial property rights. Pemsa, Rejiband, Pemsaband, Inducanal, Rejitech, Megaband, Pemsaflex are registered trademarks property of "Pemsa Cable Management, S.A."

Conduit Protector (Ref: 33100036)

Product data

ETIM 10	
Huella de CO2. GWP A1-A3 (kg CO2 eq.)	
Colour	Black RAL 9005
DN	NW36
kg/u	0,050
u	10

Material	Poyamide 12
Working temperature range (°C)	-25 / 90 °C
Fire resistance	LIBRE DE HALÓGENOS,NO PROPAGADOR DE LA LLAMA

Protection System

CU - Copper electroplated

PG - Pregalvanised

EZ - Electrogalvanised

BC - Electrogalvanised Bichromate

BK8 - High Resistance Coating

GC - Hot Dip Galvanising

INOX - Stainless Steel

PT - Polyester Paint

AL - Aluminum

LN - Brass or Nickel-plated brass

Insulating materials

PC+ABS - Halogen Free Polycarbonate + ABS

PVC - Polyvinyl Chloride

PP - Halogen Free Polypropylene

PA6 - Halogen Free Polyamide 6

PA12 - Halogen Free Polyamide 12

PU - Polyurethane

PE - Polyethylene

NBR - NBR rubber

PET - Thermoplastic Polyester

TPV - Thermoplastic

Any information included in this document is property of Pemsa®. It cannot be copied, total or partially, nor disclosed to third parties nor used without the explicit and written authorization by Pemsa®. These documents total or partially, can be subject to patent and/or be patent pending and therefore protected by intellectual and industrial property rights. Pemsa, Rejiband, Pemsaband, Inducanal, Rejitech, Megaband, Pemsaflex are registered trademarks property of "Pemsa Cable Management, S.A."