Fast Click Joint

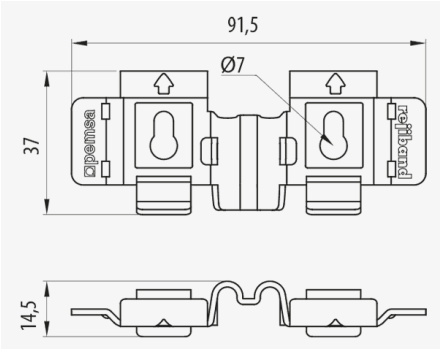

Description

Component for joining sections of trays using the Click system. It is fixed by placing the connecting piece between the sides of the trays. It is suitable for all widths of Rejiband trays of heights 60 and 100 mm, with surface protection. It is assembled without the need for any special tools and allows the joining between sections of Rejiband trays in less time, ensuring the mechanical strength of the joint and electrical continuity, according to IEC61537 standard. Made of steel and available in various Protection Systems.

Advantages

Fast installation on the tray without screws.

Simple and quick assembly without the need of special tools.

80% saving in installation time.

Electrical continuity guaranteed according to standard IEC61537.

Available in various protection systems: EZ, BC, GC or high resistance BK8, depending on the type of application.

Applications

Suitable for the fast connection of Rejiband trays in electrical and/or telecommunications installations in: Civil works, Tunnels, Car Parks, Public Buildings, Shopping Centres, Large Infrastructures, Airports, Metro Lines, Railway. Tertiary Sector and industrial applications: Naval, Petrochemical, Textile, Chemical, Food.

Solutions

Any information included in this document is property of Pemsa®. It cannot be copied, total or partially, nor disclosed to third parties nor used without the explicit and written authorization by Pemsa®. These documents total or partially, can be subject to patent and/or be patent pending and therefore protected by intellectual and industrial property rights. Pemsa, Rejiband, Pemsaband, Inducanal, Rejitech, Megaband, Pemsaflex are registered trademarks property of "Pemsa Cable Management, S.A."

Fast Click Joint

Main technical characteristics

50	Steel with surface coating	-50 / 150 °C	A1 No combustible	ETIM EC002413

Product data

Ⓢ	Class IEC 61537	REF	kg/u
EZ	Class 3	64010035	0.041
BC	Class 5	64020035	0.041
GC	Class 8	64030035	0.043
BK8	Class 8	64080035	0.042

Ⓢ Protection System

CU - Copper electroplated

PG - Pregalvanised

EZ - Electrogalvanised

BC - Electrogalvanised Bichromate

BK8 - High Resistance Coating

GC - Hot Dip Galvanising

INOX - Stainless Steel

PT - Polyester Paint

AL - Aluminum

LN - Brass or Nickel-plated brass

Ⓜ Insulating materials

PC+ABS - Halogen Free Polycarbonate + ABS

PVC - Polyvinyl Chloride

PP - Halogen Free Polypropylene

PA6 - Halogen Free Polyamide 6

PA12 - Halogen Free Polyamide 12

PU - Polyurethane

PE - Polyethylene

NBR - NBR rubber

PET - Thermoplastic Polyester

TPV - Thermoplastic

Any information included in this document is property of Pemsa®. It cannot be copied, total or partially, nor disclosed to third parties nor used without the explicit and written authorization by Pemsa®. These documents total or partially, can be subject to patent and/or be patent pending and therefore protected by intellectual and industrial property rights. Pemsa, Rejiband, Pemsaband, Inducanal, Rejitech, Megaband, Pemsaflex are registered trademarks property of "Pemsa Cable Management, S.A."

Fast Click Joint

Product applications

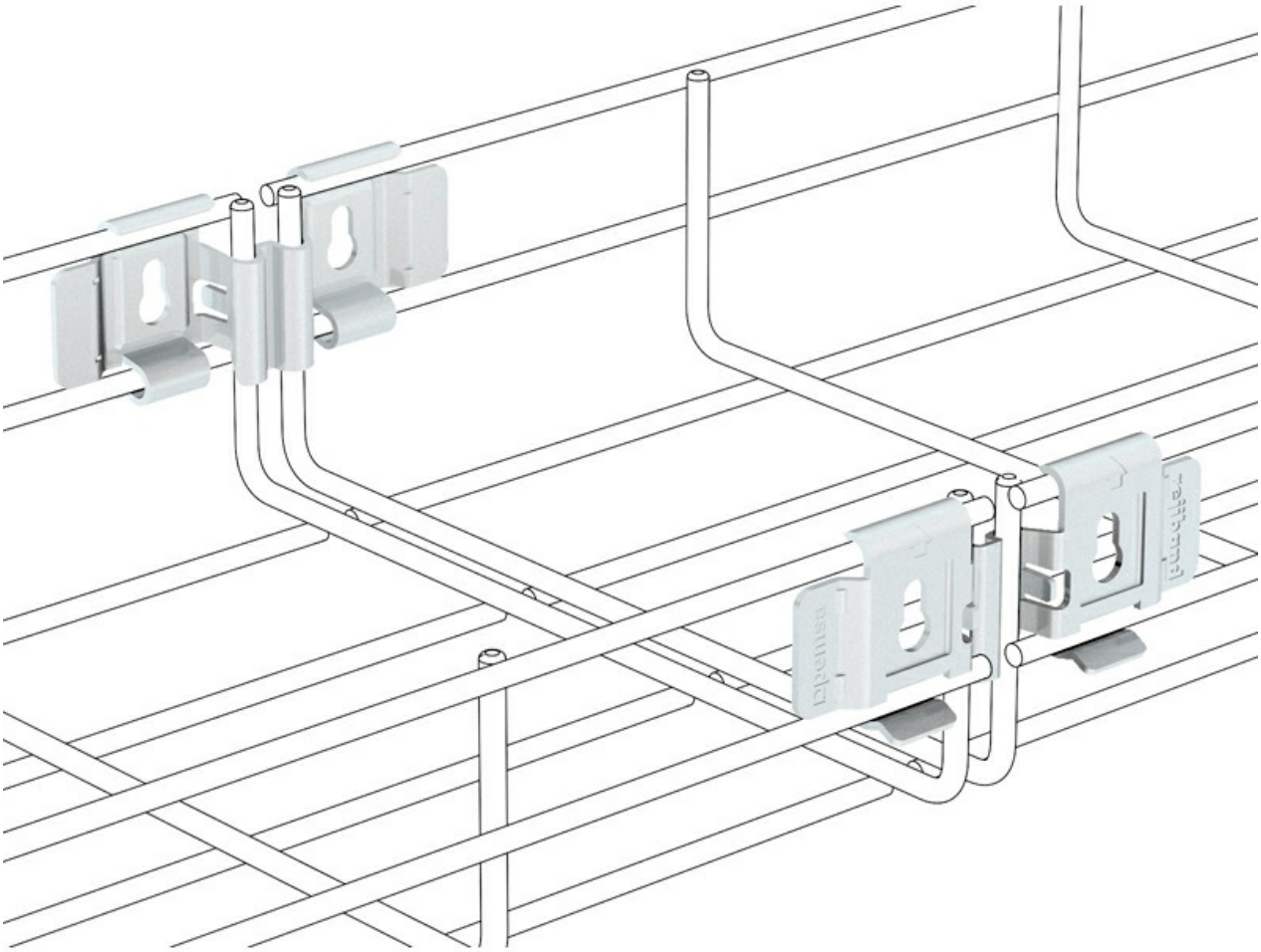

Any information included in this document is property of Pemsa®. It cannot be copied, total or partially, nor disclosed to third parties nor used without the explicit and written authorization by Pemsa®. These documents total or partially, can be subject to patent and/or be patent pending and therefore protected by intellectual and industrial property rights. Pemsa, Rejiband, Pemsaband, Inducanal, Rejitech, Megaband, Pemsaflex are registered trademarks property of "Pemsa Cable Management, S.A."

Fast Click Joint

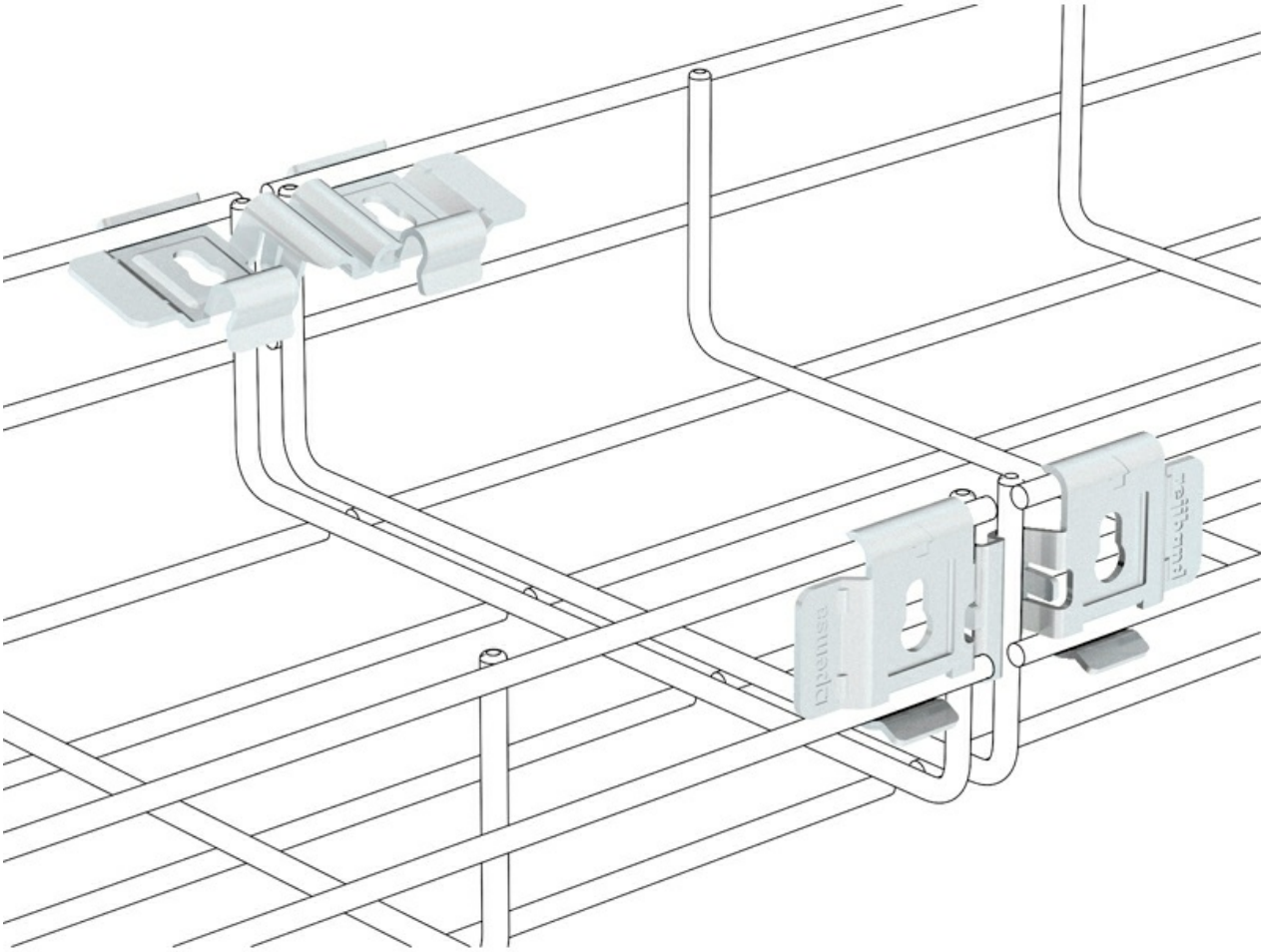

Any information included in this document is property of Pemsa®. It cannot be copied, total or partially, nor disclosed to third parties nor used without the explicit and written authorization by Pemsa®. These documents total or partially, can be subject to patent and/or be patent pending and therefore protected by intellectual and industrial property rights. Pemsa, Rejiband, Pemsaband, Inducanal, Rejitech, Megaband, Pemsaflex are registered trademarks property of "Pemsa Cable Management, S.A."