PQ Joint

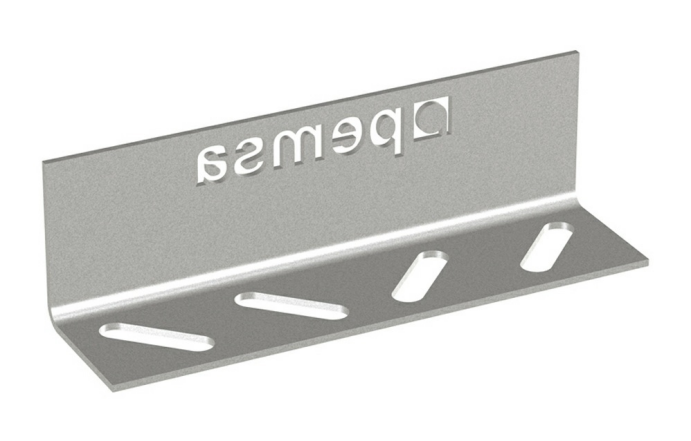

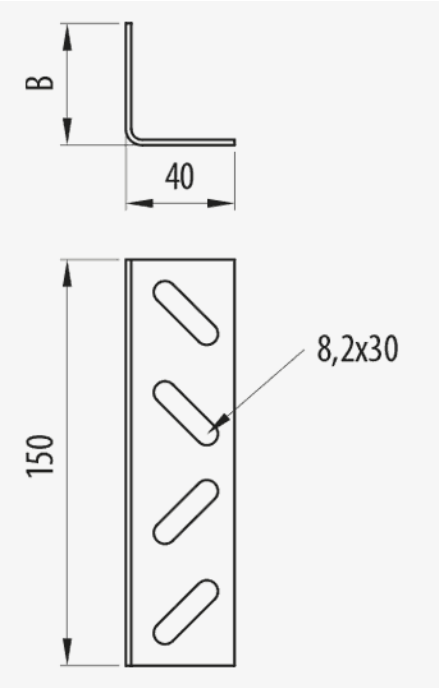

Description

Accessory for the joining of different sections of Pemsaband® PQW tray maintaining the guarantee of electrical continuity according to IEC61537 standard. Suitable for Pemsaband® PQ trays of 15, 30, 50 or 60 mm in height. Approved according to REPSOL specifications. Made of steel and with GC Protection System.

Advantages

It allows the joining of different sections of Pemsaband®PQW sheet metal tray.

Approved according to the REPSOL specification.

Electrical continuity guaranteed according to standard IEC61537.

GC protection system (standard UNE-EN ISO 1461), suitable for outdoor installations and in aggressive environments. Corrosion resistance class 8 according to IEC 61537.

Applications

Used for the joining of lengths and sections of Pemsaband® PQW trays,for the Support, management and distribution of cables in Petrochemical, Oil & Gas, Offshore, Civil works and Infrastructures, as well as in tunnels and installation galleries.

Solutions

Any information included in this document is property of Pemsa®. It cannot be copied, total or partially, nor disclosed to third parties nor used without the explicit and written authorization by Pemsa®. These documents total or partially, can be subject to patent and/or be patent pending and therefore protected by intellectual and industrial property rights. Pemsa, Rejiband, Pemsaband, Inducanal, Rejitech, Megaband, Pemsaflex are registered trademarks property of "Pemsa Cable Management, S.A."

PQ Joint

Main technical characteristics

GC | Class 8 | 15, 30, 60, 100 | 10 | Steel with surface coating | -50 / 150 °C | A1 No combustible

ETIM 10
EC002413

Product data

	REF	kg/u
15	70293010	0,108
30	70293011	0,133
60	70293013	0,184
100	70293014	0,273

Protection System

CU - Copper electroplated

PG - Pregalvanised

EZ - Electrogalvanised

BC - Electrogalvanised Bichromate

BK8 - High Resistance Coating

GC - Hot Dip Galvanising

INOX - Stainless Steel

PT - Polyester Paint

AL - Aluminum

LN - Brass or Nickel-plated brass

Insulating materials

PC+ABS - Halogen Free Polycarbonate + ABS

PVC - Polyvinyl Chloride

PP - Halogen Free Polypropylene

PA6 - Halogen Free Polyamide 6

PA12 - Halogen Free Polyamide 12

PU - Polyurethane

PE - Polyethylene

NBR - NBR rubber

PET - Thermoplastic Polyester

TPV - Thermoplastic

Any information included in this document is property of Pemsa®. It cannot be copied, total or partially, nor disclosed to third parties nor used without the explicit and written authorization by Pemsa®. These documents total or partially, can be subject to patent and/or be patent pending and therefore protected by intellectual and industrial property rights. Pemsa, Rejiband, Pemsaband, Inducanal, Rejitech, Megaband, Pemsaflex are registered trademarks property of "Pemsa Cable Management, S.A."